High speed links

www.axon-cable.com

axon'
cable & interconnect

High speed links

SPACE APPLICATIONS.....F-5

SPACEWIRE F-6
28AWG SpaceWire cable F-7
26AWG SpaceWire cable F-8

LOW MASS SOLUTIONS.....F-10
Low Mass 28AWG SpaceWire F-11
Ultra Low Mass Coax Link F-13

MICROMACH® F-16
MICROMACH® cable mount connectors F-18
MICROMACH® panel mount connectors F-20
MICROMACH® connector savers.....F-21
Detailed MICROMACH® connector spec. F-22

AXOMACH® F-26
Microwave coaxial cable F-27
QUASI-FLEX® hand-formable
semi-rigid substitute F-28
AXOMACH® cable assemblies F-29
AXOMACH® panel mount & SMD connectors F-33
AXOMACH® savers F-36
AXOMACH® blanking plates F-37
Detailed AXOMACH® cable assemblies
specifications F-38
Detailed AXOMACH® panel mount & SMD
connector specifications F-45
Detailed AXOMACH® accessories spec. F-49
SMA connectors (ESCC3402 QPL) F-53
Termination of the connectors F-53
Electrical characteristics F-54
Mechanical characteristics / Manufacturing F-55
Qualification F-56
Compatibility guide F-57
Cross codification guide F-58
Cross codification for AxoMach® connectors F-59
Cross codification for SpaceFibre
and coaxial connectors F-60
Harness codification F-61
Codification examples F-62
AxoMach® panel mount & SMD connectors F-63
AxoMach® accessories F-64

WEIGHTS F-65

High speed links

Space applications

High speed data links offered by Axon' Cable are designed to be used in spacecraft for different applications including:

- Satellite and launcher (platform) cabling:
  - Connection between the mast of the launcher and the control system
  - Spacecraft communication network
  - Driver technology compatibility: LVDS (Low Voltage Differential Signaling)
- High Data Rate payloads:
  - Interconnection of high definition imagery sensors in satellites
  - Synthetic aperture radar and hyperspectral optical instruments
  - Driver technology compatibility: CML (Current Mode Logic)

Which Axon' solutions for which data rate ?

PROTOCOL	DATA RATE: UP TO 1 MB/S	UP TO 400 MB/S	UP TO 3GB/S	UP TO 10 GB/S
SpaceWire	9-way Micro-D (Standard cable: ESCC3902 003 variant 01 and 02) or low mass cable (ESCC3902 004 variant 01) or MicroMach® for higher electrical performances (XTalk / EMI / signal integrity)		-	-
SpaceFibre, WizardLink	-			AxoMach® & AxoMach® SpaceFibre
TT-Ethernet (Etherspace)	MicroMach® (also suited to CAT6A and other Ethernet protocols)*			
RS 422 / RS 485 / CAN	D-Sub & Micro-D connectors,120 Ω twisted shielded pairs, ESCC3902 002 Variant 21 to 30 (100 or 120 Ω shielded pairs).	-	-	-
BUS 1553	D-Sub & ACB1 connectors, Bus couplers, ACB1 Triaxial connectors	-	-	-

*: Compatible with the following standards:

- 10BASE-T
- 100BASE-TX
- 100BASE-T4
- 100BASE-T
- 2.5GBASE-T
- 5GBASE-T
- 10GBASE-T
- ATM-25
- ATM-51
- ATM-155
- 100VG-AnyLan
- TR-4
- TR-16 Active
- TR-16 Passive

© 2004, AXON' CABLE - RELEASED JUNE 2021/H

SpaceWire

Axon' has developed cables and connectors for SpaceWire interconnects, allowing reliable transmission of data at high speed (between 2 Mb/s and 400 Mb/s) between on-board devices in spacecraft.

SPACEWIRE LINKS

SpaceWire links: reliable data transmission

- Based on LVDS spacecraft communication system to ECSS-E-ST-50-12C
- Data transfer up to 400 Mb/s while maintaining a wide working margin
- Low skew, crosstalk and signal attenuation
- Robust cable

Signal integrity

AXON' digital data transmission bus assemblies which meet the MIL-STD-1553 standard are used for military and aeronautic applications, and have also been integrated within the space environment for over 10 years.
In addition to bus harnesses which ensure the connection between on-board devices, SpaceWire links make possible the transfer of up to 400Mb/s while maintaining a wide working margin, thanks to the use of CELLOFLON®, expanded PTFE developed by AXON'.

The ESCC 3902/003 and 3902/004 qualified cable and ESCC 3401/029 EPPL2 connectors and accessories manufactured by AXON' protect the integrity of LVDS signals (Low Voltage Differential Signalling) provided by the devices. The cabling has been optimised in order to minimise any mismatching and crosstalk between lines.

A test report validates every SpaceWire link. The electrical performance, which depends on the transmission speed, can be shown with an eye pattern which includes characteristics such as signal jitter. AXON' can generate and analyse high speed signals up to 40 Gb/s in base band and for Ethernet applications.

Engineering Model or Flight Model designs

AXON' can offer several designs for Engineering Models (EM) or Flight Models (FM) on request. For custom Lab test harnesses, for example, AXON' can offer lightweight design configurations for a more cost effective solution (such as a one piece connector and backshell system).

Environmental characteristics

Radiation: up to 400MRad with ESCC 3902/004 Low Mass SpW cable (Static use).

axon' cable & interconnect

© 2013, AXON' CABLE - RELEASED JUNE 2021/H

28AWG SpaceWire cable

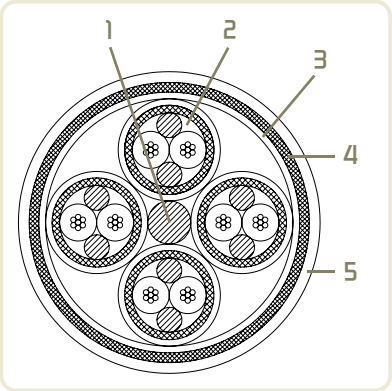

CONSTRUCTION

AXON' 28AWG SpaceWire cable qualified to **ESCC 3902/003 variant 01** (AXON' part number: P532242) consists of 4 shielded twisted pairs covered by an overall shield and outer jacket, as shown in the specification.

1 - CELLOFLON® expanded PTFE filler

- Diameter: 1.00 mm nom.

2 - 4 x 100 Ω 28AWG BUS Lines

CONDUCTOR AWG 2807
- Stranded silver plated copper alloy 2 µm.
- 7 x 0.127 mm strands.
- Diameter: 0.38 mm nominal.
- Cross section: 0.089 mm^2 nominal.
- Resistance: 23 Ω/100 m nominal.

DIELECTRIC: CELLOFLON® expanded PTFE
- Colour: blue / white.

BRAIDED SHIELD
- Material: silver plated copper 2.5 µm.
- Strand diameter: 0.079 mm.

JACKET
- Material: extruded PFA.
- Diameter: 2.37 mm nominal.
- Colour: white.

3 - CELLOFLON® expanded PTFE tape

4 - Braided shield

- Material: silver plated copper 2.5 µm.
- Strand diameter: 0.102 mm.

5 - Outer jacket

- Material: PFA.
- Colour: white.

MAIN CHARACTERISTICS

- Outer diameter: 7.5 mm maximum.
- Weight: 85 g/m maximum.
- Operating temperature: -200 / +180°C.
- Impedance (between wires): 100 Ω (±6 Ω) at 400 MHz.

28AWG CLASSIC SPACEWIRE CABLE

© 2013, AXON' CABLE - RELEASED JUNE 2021/H

26AWG SpaceWire cable

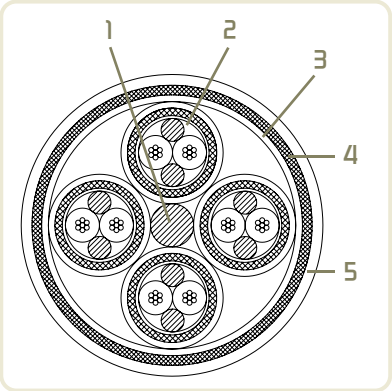

CONSTRUCTION

AXON' 26AWG SpaceWire cable qualified to **ESCC 3902/003 variant 02** (AXON' part number: P544806) consists of 4 shielded twisted pairs covered by an overall shield and outer jacket, as shown in the specification.

1 - CELLOFLON® expanded PTFE filler

- Diameter: 1.40 mm nominal.

2 - 4 x 100 Ω 26AWG BUS Lines

CONDUCTOR AWG 2607
- Stranded silver plated copper alloy 2 µm.
- 7 x 0.160 mm strands.
- Diameter: 0.48 mm nominal.
- Cross section: 0.141 mm^2 nominal.
- Resistance: 14 Ω/100 m nominal.

DIELECTRIC: CELLOFLON® expanded PTFE.
- Colour: blue / white.

BINDER

BRAIDED SHIELD
- Material: silver plated copper 2.5 µm.
- Strand diameter: 0.079 mm.

JACKET
- Material: extruded PFA.
- Diameter: 3.05 mm nominal.
- Colour: white.

3 - CELLOFLON® expanded PTFE tape

4 - Braided shield

- Material: silver plated copper 2.5 µm.
- Strand diameter: 0.102 mm.

5 - Outer jacket

- Material: PFA.
- Colour: blue

MAIN CHARACTERISTICS

- Outer diameter: 9.00 mm maximum.
- Weight: 115 g/m maximum.
- Operating temperature: -200 / +180°C.
- Impedance (between wires): 100 Ω (±6 Ω) at 400 MHz.

© 2013, AXON' CABLE - RELEASED JUNE 2021/H

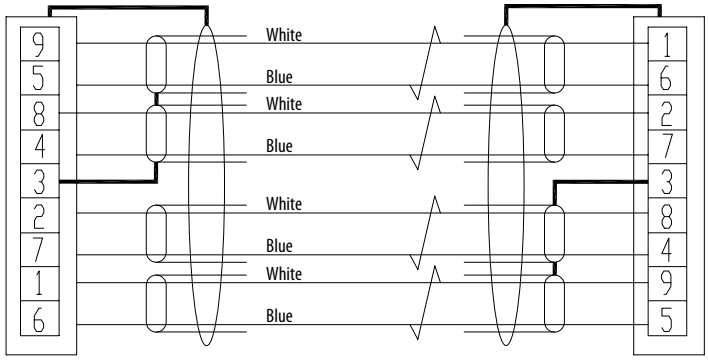

WIRING DIAGRAM ACCORDING TO ECSS-E-ST-50-12C REV 1 - FOR TYPE AL (LEGACY) LINKS

Test and measurements

- Eye pattern measurements (up to 10 Gb/s),
  - Jitter measurements,
  - Eye height and width,
  - Q factor,
  - Skew.

- TDR (Time Domain Reflectometry) analysis,
  - Impedance analysis,
  - Skew.

- BER test (Bit Error Rate),
  - PRBS (Pseudo Random Binary Sequence) generation and analysis.

Connection

For either cable size (AWG26 or AWG28), there are two possibilities to connect the link to the PCB:
- Pigtail whose wires are soldered to the PCB.
- Special 9 way CBR connector (each line has the same electrical length to reduce the skew between one another).

SPACEWIRE LINKS

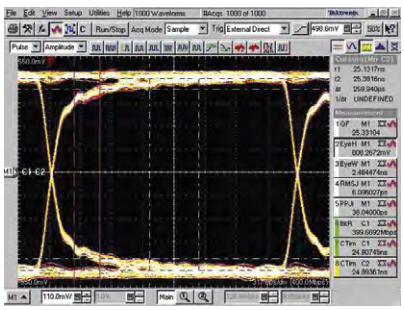

EYE PATTERN - 400 MBPS

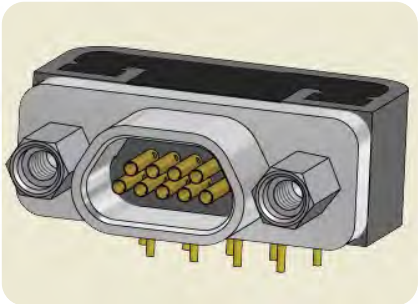

9 WAY CBR CONNECTOR

© 2013, AXON' CABLE - RELEASED JUNE 2021/H

Low Mass solutions

With long experience in space wiring and a mastery of many advanced cabling technologies, AXON' has designed two new solutions to lighten traditional high speed links: The Low Mass SpaceWire and the Ultra Low Mass Coax Link.

Weight saving: a key issue in space

- AXON has developed **Low Mass SpaceWire** cable specifically for SpaceWire applications, which is uniquely qualified to **ESCC3902/004**. The cable assembly is terminated with ESCC 3401/029 EPPL 2 Micro-D connectors. Low Mass SpaceWire is 50% lighter than standard SpaceWire.
- The **Ultra Low Mass Coax Link**, based on AXON's coaxial cable expertise, is almost 30% lighter still, and is significantly smaller and even more flexible. It is not ESA endorsed for the SpaceWire protocol, but may still be interesting for certain applications.

Main characteristics

	Classic SpaceWire cable ESCC 3902.003.01	Low Mass SpaceWire cable ESCC 3902.004.01	Ultra Low Mass Coax Link with overall shield	Ultra Low Mass Coax Link without overall shield
Mass (g/m)	85 max.	42 max.	32.5 max.	30 max.
Overall Ø (mm)	7 max.	6.5 max.	4.5 max.	4.2 max.
Static bend radius	45	25	10	6
Dynamic bend radius	60	30	20	15
Impedance (Ω)	100 ±6	100 ±6	2x50 ±2	2x50 ±2
Capacitance (pF) - intra pair - inter pair	 < 50 < 90	 < 50 < 90	 < 48 < 97	 < 48 < 97
Resistance DC (Ω/m)	0.23	0.23	0.90	0.90
Intra pair skew (ps/m)	< 80	< 50	< 20	< 20
Inter pair skew (ps/m)	< 130	< 100	< 20	< 20
Average α (dB/m) @1 GHz Cable length (for -6 dB atten.)	-1.5 4.5 m max.*	-1.4 4.6 m max.*	-2.6 2.3 m max.*	-2.6 2.3 m max.*

*: for a 400 Mb/s data rate

LOW MASS SPACEWIRE LINK

© 2013, AXON' CABLE - RELEASED JUNE 2021/H

Low Mass 28AWG SpaceWire cable

Making use of AXON's CELLOFLON® expanded PTFE, alveolar a-PTFE dielectrics and AXON's patented AXALU® silver plated aluminium shields, the new **Low Mass SpaceWire** cable saves almost half the weight compared to conventional SpaceWire cable constructions.

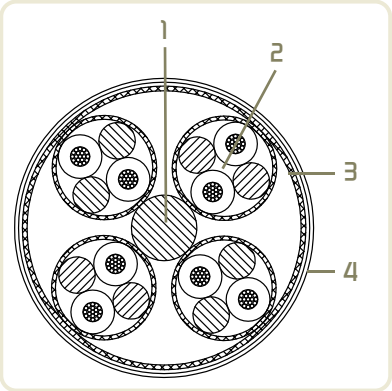

CONSTRUCTION

AXON's Low Mass 28AWG SpaceWire cable according to the **ESCC 3902/004.01** requirements (AXON' part number: P551259) consists of 4 shielded twisted pairs covered by an overall shield and outer jacket, as shown in the specification.

1 - CELLOFLON® expanded PTFE filler

- Diameter: 1.35 mm nom.

2 - 4 x 100 Ω 28AWG BUS Lines

CONDUCTOR AWG 2819

- Stranded silver plated copper alloy (2 µm minimum).
- 19 x 0.079 mm strands.
- Diameter: 0.395 mm nominal.
- Cross section: 0.093 mm^2 nominal.
- Resistance: 23 Ω/100 m nominal.

DIELECTRIC: Alveolar PTFE.

- Colour: blue / white.

INNER BRAIDED SHIELD

- Material: silver plated aluminium (2 µm minimum).
- Strand diameter: 0.079 mm.

3 - Braided shield (in electrical contact with the inner braided shields)

- Material: silver plated aluminium (2 µm minimum).
- Strand diameter: 0.100 mm.

4 - Outer jacket

- Material: Expanded PTFE tape (CELLOFLON®) under a Polyimide tape.

MAIN CHARACTERISTICS

- Outer diameter: 6.5 mm maximum.
- Bend radius: 25 mm minimum for fully static applications.
- Weight: 42 g/m maximum.
- Operating temperature: -100 / +150°C.
- Impedance (between wires of a pair): 100 Ω (±6 Ω) at 400 MHz.
- All inner shields are in contact with overall shield.

MAIN ADVANTAGES COMPARED TO THE ESCC3902/003 VARIANT 01

- Smaller bend radius (routing made easier)
- Approximately half the weight
- Reduced intra-pair and inter-pair skew
- Improved resistance to radiation (evaluation performed up to 300 Mrad)

© 2013, AXON' CABLE - RELEASED JUNE 2021/H

Part list

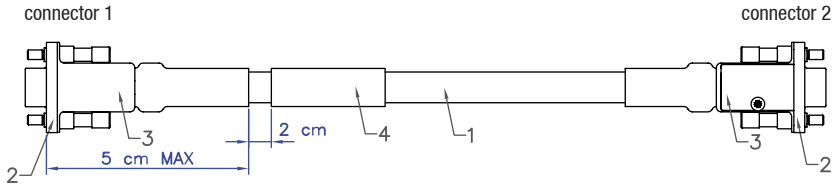

1 - Low Mass SpaceWire cable (P551259)
2 - Micro-D plug connector (MDSA209P000B: 9 ways / high phosphorous nickel plated)
3 - High phosphorous nickel plated backshell and stainless steel 2-56 UNC-2A fastners
4 - Marking sleeve

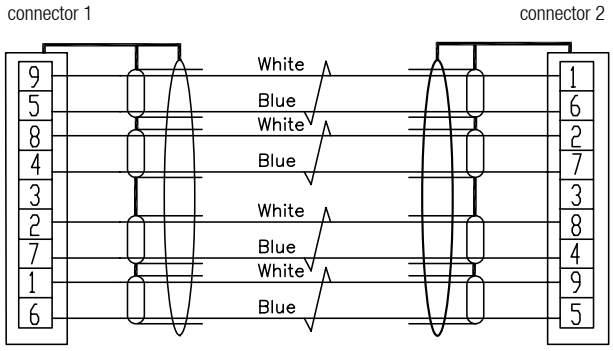

WIRING DIAGRAM (PIN ALLOCATION ACCORDING TO ECSS-E-ST-50-12C Rev1, FOR TYPE A LINKS)

ESCC	3902.003/01	3902.004/01
PART NUMBER	P532242	**P551259**
WEIGHT	85 g/m	**42 g/m**
DIAMETER	7 mm max.	**6.5 mm max.**

Cable shield connection: All shields are terminated to the shell of the Micro-D connectors. Alternatively, the shields can also be connected to pin 3 at both ends on request.
Skew inter pair: 0.1 ns/m maximum. / **Skew intra pair**: 0.05 ns/m maximum.

Depending on the required frequency and data rate, this assembly can be up to 10 meters long without exceeding the 6 dB attenuation limit. This limit is measured at the 5th harmonic of the fundamental equivalent frequency of the LVDS signal (250MHz for 100Mb/s; 500MHz for 200Mb/s or 1GHz for 400Mb/s). The real requirement is to be outside the mask (see above). Please contact us for more details.

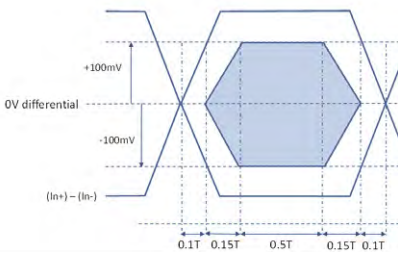

SPACEWIRE PERFORMANCES MASK FOR EYE PATTERN MEASUREMENT.
EYE PATTERN MODEL FROM ECSS-E-ST-50-12C REV 1.

Test and measurements

- **Eye pattern measurements (up to 10 Gb/s)**: Jitter measurements, Eye height and width, Q factor and Skew.
- **TDR (Time Domain Reflectometry) analysis**: Impedance analysis and Skew.
- **BER test (Bit Error Rate)**: PRBS (Pseudo Random Binary Sequence) generation and analysis.
- **Crosstalk**

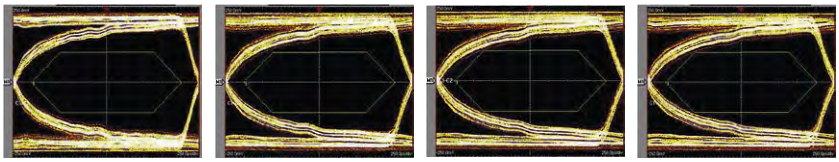

EYE PATTERN DIAGRAM MEASUREMENT AT 400 Mb/s FOR EACH PAIR OF A LOW MASS SPACEWIRE ON A 4.5 m ASSEMBLY.
WORST CASE OF AMPLITUDE (250 mV peak).

© 2013, AXON' CABLE - RELEASED JUNE 2021/H

Ultra Low Mass Coax Link

The **Ultra Low Mass Coax Link** based on AXON' coaxial cable expertise, is almost 30% lighter than the already very light Low Mass SpaceWire cable. This radical solution is significantly smaller and more flexible than the conventional twisted pair approach and exceeds the performance requirements for high speed serial data links compared to twisted pair cables. Although these links meet all SpaceWire performance requirements, because they are based on coaxial, rather than twisted pair constructions they are not formally endorsed by ESA for SpaceWire use.
At the customer's discretion, however, they can prove an interesting option for applications where installation space and mass budgets are extremely limited, or particularly where an alternative protocol to SpaceWire is in use.
Important: Potential users of this solution must ensure for themselves that the cable is compatible with their application.

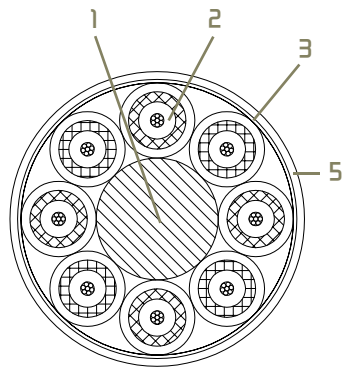

P551260

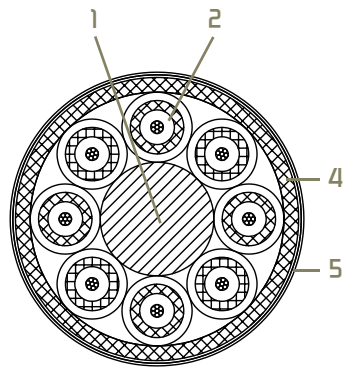

P547585

ULTRA LOW MASS COAX LINK

CONSTRUCTION

AXON's Ultra Low Mass Coax Link (AXON' part numbers: P551260 for the version without overall shield and P547585 for the version with) consists of 8 coaxial cables stranded around a filler and outer tape, as shown in the specification.

1 - CELLOFLON® expanded PTFE filler
- Diameter: 1.70 mm nominal.

2 - 8 x 50 Ω SM50 Coaxial cables

CONDUCTOR AWG 3407
- Stranded silver plated copper alloy (2 µm).
- 7 x 0.063 mm strands.
- Diameter: 0.187 mm nominal.
- Cross section: 0.020 mm^2 nominal.
- Resistance: 90.9 Ω/100 m nominal.

DIELECTRIC: PTFE
- Colour: white.

BRAIDED SHIELD
- Material: silver plated copper (2.5 µm).
- Strand diameter: 0.063 mm.

JACKET
- Material: extruded PFA.
- Colour: white.

3 - CELLOFLON® expanded PTFE tape (on P551260 only)

4 - Braided shield (on P547585 only)

5 - Polyimide tape (single layer on P551260, double layer on P547585)

MAIN CHARACTERISTICS
- Outer diameter: 4.20 mm maximum (4.50 mm with overshield).
- Bend radius: 6 mm minimum for fully static applications.
- Weight: 30 g/m maximum (32.5 g/m with overshield).
- Operating temperature: -100 / +150°C.
- Impedance (between wires of a pair): 8x50 Ω at 400 MHz.

MAIN ADVANTAGES COMPARED TO THE ESCC 3902/003 VARIANT 01
- Smaller bend radius (routing made easier)
- More than half the weight saving
- Reduced intra-pair and inter-pair skew
- Improved resistance to radiation

Note: The maximum length is shorter due to a higher attenuation.
Ultra Low Mass Coax Links can be terminated with 9 way Micro-D connectors (such as are employed on SpaceWire and Low Mass SpaceWire links) or ultra miniature 15 way Nano-D connectors, suitable for applications where the connector interface area is extremely limited.

© 2013, AXON' CABLE - RELEASED JUNE 2021/H

Part list

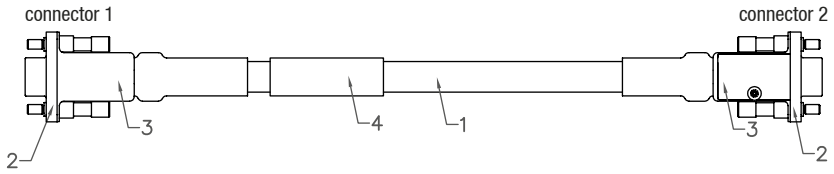

1 - Ultra Low Mass Coax cable (P551260 or P547585)
2 - Micro-D plug connector (MDSA209P000B: 9 ways / high phosphorous nickel plated)
3 - High phosphorous nickel plated backshell and stainless steel 2-56 UNC-2A fastners
4 - Marking sleeves

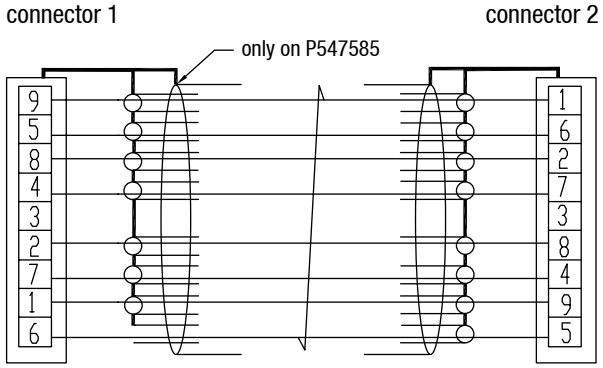

WIRING DIAGRAM (PIN ALLOCATION)

ESCC	3902.003/01	Ultra Low Mass Coax cable with overall shield	Ultra Low Mass Coax cable without overall shield
PART NUMBER	P532242	**P547585**	**P551260**
WEIGHT	85 g/m	**37.5 g/m max.**	**32.5 g/m max.**
DIAMETER	7 mm max.	**4.5 mm max.**	**4.2 mm max.**

Cable shield connection: All coaxial shields are terminated to the shell of both connectors.
Skew inter pair: 0.1 ns/m maximum. / **Skew intra pair**: 0.02 ns/m maximum.

Depending on the required frequency and data rate, this assembly can be up to 4 meters long without exceeding the 6 dB attenuation limit. This limit is measured at the 5th harmonic of the fundamental equivalent frequency of the LVDS signal (250MHz for 100Mb/s; 500MHz for 200Mb/s or 1GHz for 400Mb/s). The real requirement is to be outside the mask (see above). Please contact us for more details.

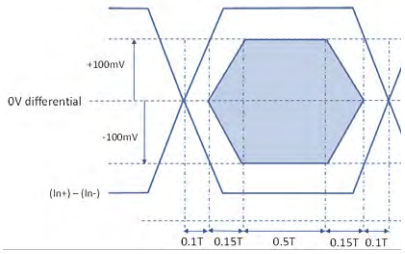

SPACEWIRE PERFORMANCES MASK FOR EYE PATTERN MEASUREMENT.
EYE PATTERN MODEL FROM ECSS-E-ST-50-12C REV 1.

Test and measurements

- **Eye pattern measurements (up to 10 Gb/s)**: Jitter measurements, Eye height and width, Q factor and Skew.
- **TDR (Time Domain Reflectometry) analysis**: Impedance analysis and Skew.
- **BER test (Bit Error Rate)**: PRBS (Pseudo Random Binary Sequence) generation and analysis.
- **Crosstalk**

© 2013, AXON' CABLE - RELEASED JUNE 2021/H

Part list

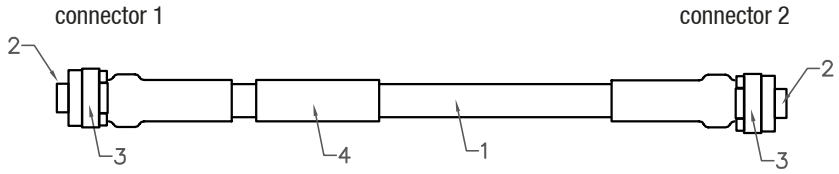

1 - Ultra Low Mass Coax cable (P551260 or P547585)
2 - Nano-D plug connector (ND2A215P000B: 15 ways / nickel plated)
3 - Nickel plated backshell and stainless steel 0-80 UNF fasteners
4 - Marking sleeves

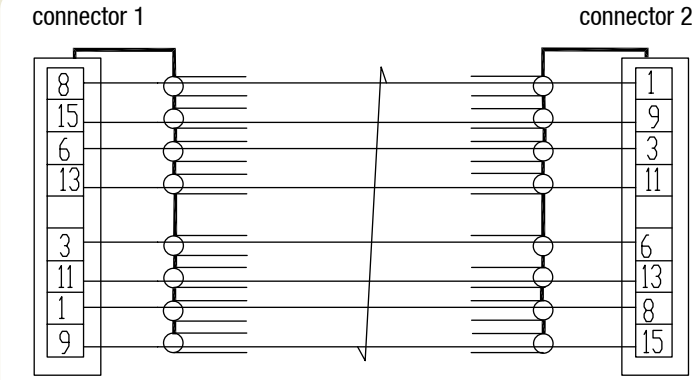

WIRING DIAGRAM (PIN ALLOCATION)

ESCC	3902.003/01	Ultra Low Mass Coax cable with overall shield	Ultra Low Mass Coax cable without overall shield
PART NUMBER	P532242	**P547585**	**P551260**
WEIGHT	85 g/m	**37.5 g/m max.**	**32.5 g/m max.**
DIAMETER	7 mm max.	**4.5 mm max.**	**4.2 mm max.**

Cable shield connection: All coaxial shields are terminated to the shell of both connectors.
Skew inter pair: 0.1 ns/m maximum. / **Skew intra pair**: 0.02 ns/m maximum.

Depending on the required frequency and data rate, this assembly can be up to 4 meters long without exceeding the 6 dB attenuation limit. Please contact us for more details.

Test and measurements

- **Eye pattern measurements (up to 10 Gb/s)**: Jitter measurements, Eye height and width, Q factor and Skew.
- **TDR (Time Domain Reflectometry) analysis**: Impedance analysis and Skew.
- **BER test (Bit Error Rate)**: PRBS (Pseudo Random Binary Sequence) generation and analysis.
- **Crosstalk**

© 2013, AXON' CABLE - RELEASED JUNE 2021/H

MicroMach®

As data rates and EMI requirements increase, Axon' introduces MicroMach®, an impedance matched high speed connector, initially developed for optimized SpaceWire performance, but which can also be used for other protocols such as SpaceFibre, Wizardlink, & TT-Ethernet.

MICROMACH® AND LOW MASS SPACEWIRE LINK

Higher performance

- Compact,
- Matched 100 Ω impedance pairs: excellent continuity of signal,
- Low crosstalk between ways,
- Enjoys a robust EMC design, providing protection for both the cable and the equipment,
- Is capable of data rates well in excess of typical SpaceWire performance - up to 3 Gb/s.

Electrical Characteristics

Characteristics		Specification		
Max. Operating Data Rate		3 Gb/s		
Mating / unmating forces		MF < 25N 3N < UF < 25N		
Shield resistance		11 mΩ/m		
Mated shell conductivity		5 mΩ		
Characteristic impedance		90Ω < ZC < 110Ω		
Crosstalk FEXT and NEXT		< -50dB up to 1 GHz		
Shielding effectiveness		< -80dB up to 1 GHz		
		3902/003 SpaceWire AWG26	**3902/003 SpaceWire AWG28**	**3902/004 Low Mass SpaceWire**
Intra-pair Skew		Max. 80 ps/m	Max. 80 ps/m	Max. 50 ps/m
Inter-pair Skew		Max. 130 ps/m	Max. 130 ps/m	Max. 100 ps/m
Insertion Loss	Up to 1.5 GHz	-2.25 dB/m	-2.95 dB/m	-2.95 dB/m
	Up to 3 GHz	-3.70 dB/m	-7.90 dB/m	-4.90 dB/m
	Up to 4.5 GHz	-5.00 dB/m	-6.65 dB/m	-6.65 dB/m

© 2013, AXON' CABLE - RELEASED JUNE 2021/H

Mechanical characteristics

Characteristics	Specification
Maximum cable weight - SpaceWire, AWG26 (ESCC 390200302) - SpaceWire, AWG28 (ESCC 390200301) - Low Mass SpaceWire, AWG28 (ESCC 390200401)	 - 115g/m max. - 85 g/m max. - 42 g/m max.
Mating force	< 25 N
Demating force	3 N < demating force < 25 N
Operating and storage temperature	-55°C to +125°C

ESCC Standard	Connector	Nom. Weight (g)
	Cable mount connectors	
3409-002	01 & 02	9.5 g
	03 & 04	9 g
	PCB connectors	
3401-095	01	4.5 g
	02	5 g
	03	5.5 g
	Saver connectors	
3401-096	01	7.5 g

Wiring

When ordering a **MicroMach assembly** for normal SpaceWire use or as a primary SpW test cable, **indirect (or "crossover") wiring** should be selected. Typically, this is most likely to be with a male to male link.

Contact linking for indirect wiring

Variant	Connector	Pin numbers							
ESCC 3409-002 codes 01 or 02	1st connector, e.g. code 01 or 02 (male)	1	2	3	4	5	6	7	8
	2nd connector, e.g. code 01 or 02 (male)	3	4	1	2	7	8	5	6

However, if ordering a **MicroMach SpaceWire Extension cable**, to extend the length of an existing MicroMach SpaceWire cable, for example, when entering a TVAC chamber, **direct wiring** should be, to avoid negating the crossover effect. Typically, this may be with a female to male link.

Contact linking for direct wiring

Variant	Connector	Pin numbers							
ESCC 3409-002 codes 01 & 03 or 02 & 04	1st connector, e.g. code 01 or 02 (female)	1	2	3	4	5	6	7	8
	2nd connector, e.g. code 01 or 02 (male)	1	2	3	4	5	6	7	8

Signals

Pin / socket 1: Dout-	Pin / socket 2: Dout+	Pin / socket 3: Din-	Pin / socket 4: Din+
Pin / socket 5: Sout-	Pin / socket 6: Sout+	Pin / socket 7: Sin-	Pin / socket 8: Sin+

© 2013, AXON' CABLE - RELEASED JUNE 2021/H

MICROMACH® cable mount connectors

- EMI seals: conductive silicone based rubber
- Shrinkable strain relief: fluoropolymer

Materials:
- Housing and shield termination: 25.4µm minimum high phosphorus nickel plating on aluminium alloy
- Insert: PEEK
- Contact: 1.27µm gold over 1.27µm nickel plating on copper alloy
- Hardware: Stainless steel

MicroMach® AWG26 Male In-line Plug

ESCC 3409/002 - CONNECTOR CODE 01 (see details page F-22)

MicroMach® AWG28 Male In-line Plug

ESCC 3409/002 - CONNECTOR CODE 02 (see details page F-22)

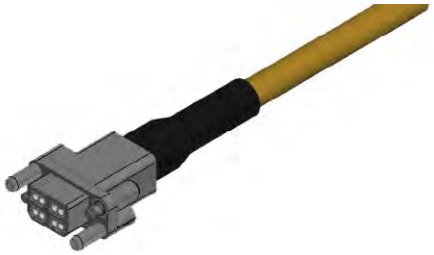

MicroMach® AWG26 Female Panel Mount Jack

ESCC 3409/002 - CONNECTOR CODE 03 (see details page F-23)

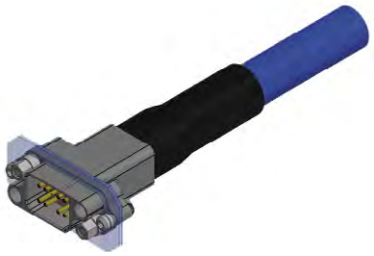

Dimensions in mm. All ESCC specifications are subject to change. Please refer to https://escies.org for latest specifications.

© 2013, AXON' CABLE - RELEASED JUNE 2021/H

MicroMach® AWG28 Female Panel Mount Jack

ESCC 3409/002 - CONNECTOR CODE 04 (see details page F-23)

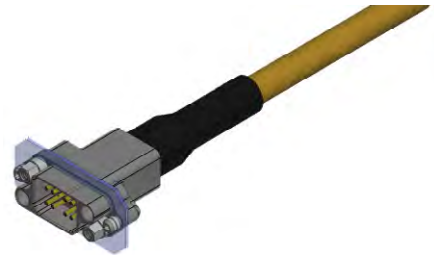

Dimensions in mm. All ESCC specifications are subject to change. Please refer to https://escies.org for latest specifications.

© 2013, AXON' CABLE - RELEASED JUNE 2021/H

MICROMACH® panel mount connectors

Materials:
- Housing and shield termination: 25.4µm minimum high phosphorus nickel plating on aluminium alloy
- Insert: PEEK
- Contact: 1.27µm gold over 1.27µm nickel plating on copper alloy
- Hardware: Stainless steel

Mechanical:
- Torque screw-nut: 0.35 N.m
- Nuts and washers are included
- Jackpost diameter: 2-56-UNC-2B

MicroMach® Female Edge PCB SMT Panel Mount

ESCC 3401/095 - VARIANT 01 (see details page F-24)

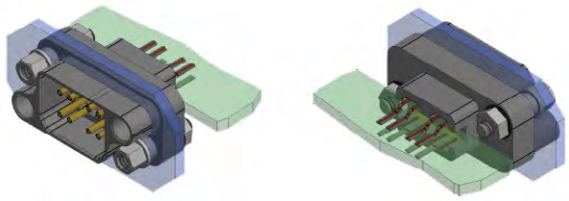

PCB Terminations: Copper alloy, silver plated 2 µm minimum

MicroMach® Female Wired PCB Panel Mount

ESCC 3401/095 - VARIANT 02 (see details page F-24)

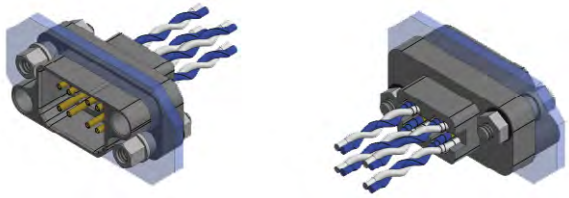

PCB Terminations: Unshielded twisted pair, 100Ω with PTFE dielectric core and silver plated annealed copper center conductor

MicroMach® Female Flex PCB Panel Mount

ESCC 3401/095 - VARIANT 03 (see details page F-25)

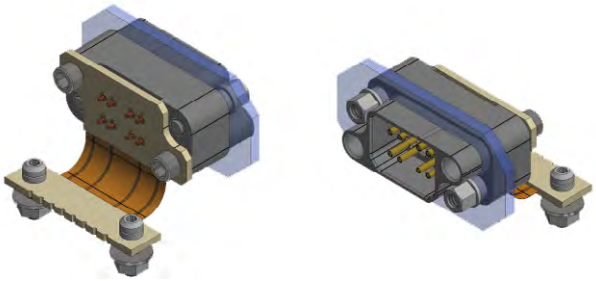

PCB Terminations: Flexible PCB with Copper / Polyimide coverlays (2 layers with metalized holes) and full ground plane.

© 2013, AXON' CABLE - RELEASED JUNE 2021/H

MICROMACH®
connector saver

- EMI seals: conductive silicone based rubber

Materials:
- Housing and shield termination: 25.4µm minimum high phosphorus nickel plating on aluminium alloy
- Insert: PEEK
- Contact: 1.27µm gold over 1.27µm nickel plating on copper alloy
- Hardware: Stainless steel

MicroMach® Saver

ESCC 3401/096 - VARIANT 01 (see details page F-25)

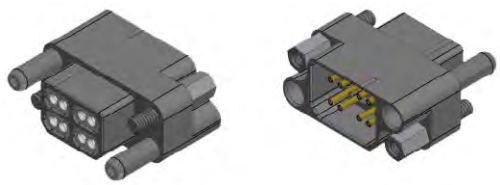

© 2013, AXON' CABLE - RELEASED JUNE 2021/H

Detailed MICROMACH® connector specifications

MicroMach® AWG26 Male, In-line Plug
ESCC 3409/002 - CONNECTOR CODE 01

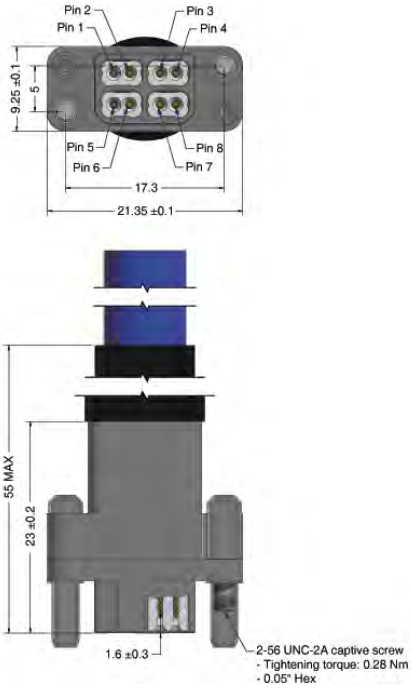

MicroMach® AWG28 Male, In-line Plug
ESCC 3409/002 - CONNECTOR CODE 02

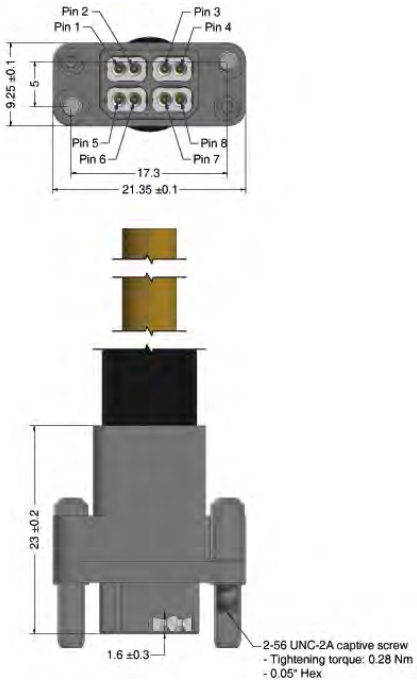

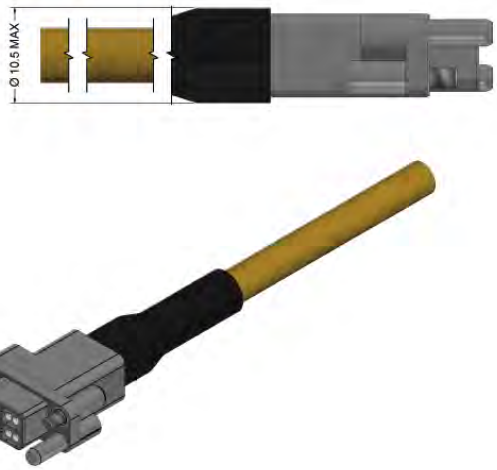

Dimensions in mm. All ESCC specifications are subject to change. Please refer to https://escies.org for latest specifications.

© 2013, AXON' CABLE - RELEASED JUNE 2021/H

MicroMach® AWG26 Female Panel Mount Jack

ESCC 3409/002 - CONNECTOR CODE 03

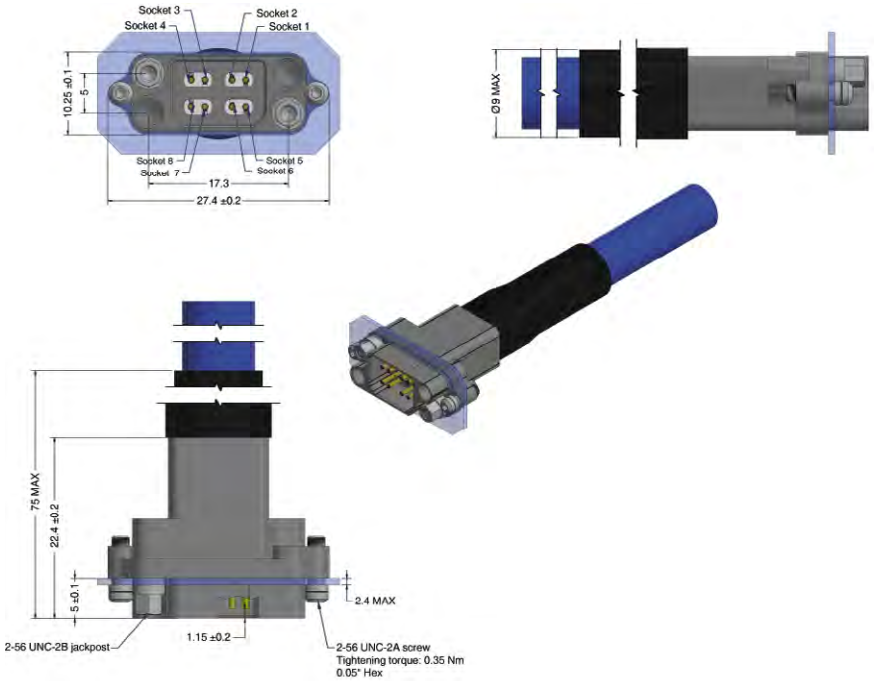

MicroMach® AWG28 Female Panel Mount Jack

ESCC 3409/002 - CONNECTOR CODE 04

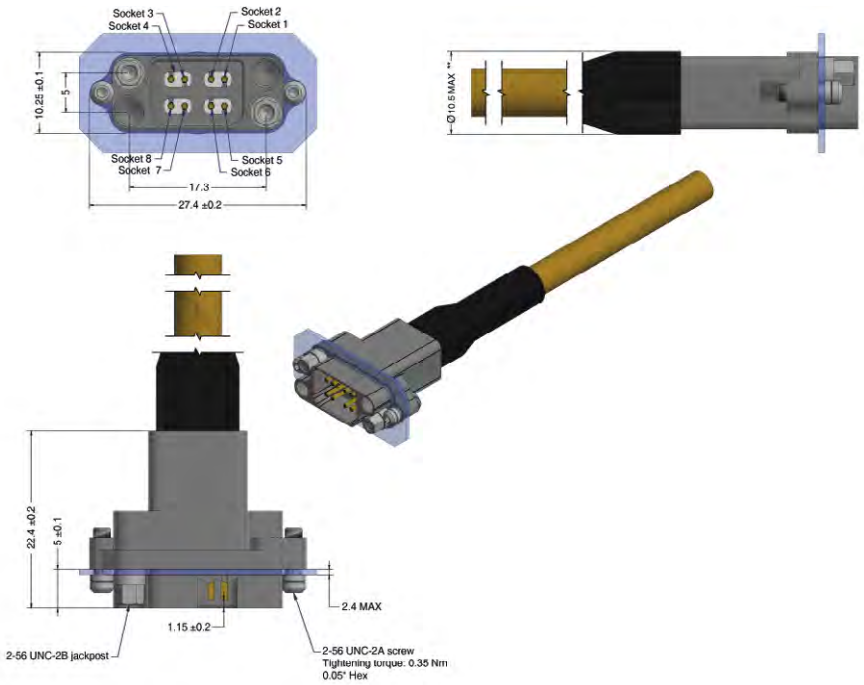

Dimensions in mm. All ESCC specifications are subject to change. Please refer to https://escies.org for latest specifications.

© 2013, AXON' CABLE - RELEASED JUNE 2021/H

MicroMach® Female Edge PCB SMT Panel Mount

ESCC 3401/095 - VARIANT 01

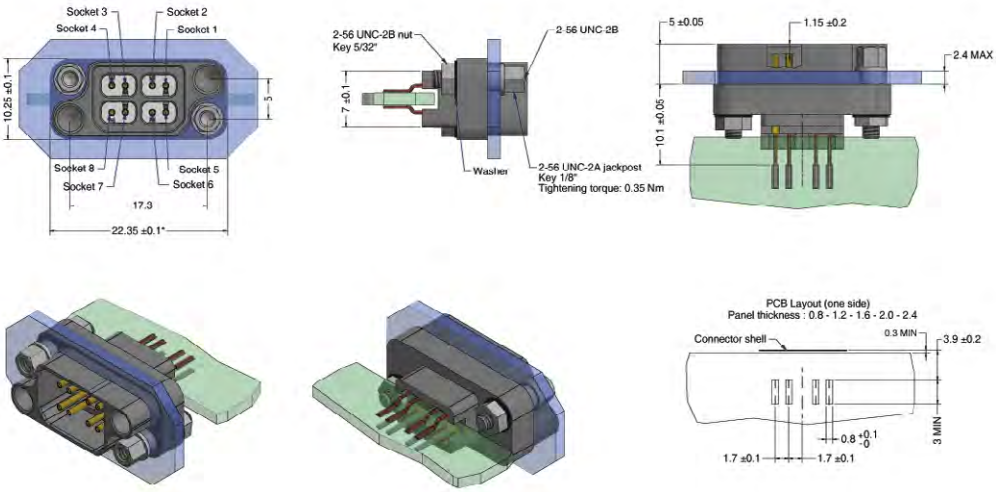

MicroMach® Female Wired PCB Panel Mount

ESCC 3401/095 - VARIANT 02

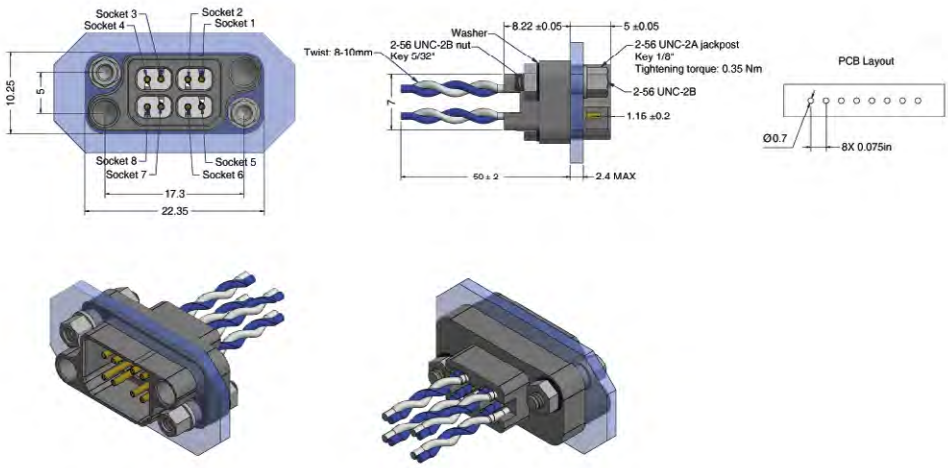

Dimensions in mm. All ESCC specifications are subject to change. Please refer to https://escies.org for latest specifications.

axon' cable & interconnect
© 2013, AXON' CABLE - RELEASED JUNE 2021/H

MicroMach® Female Flex PCB Panel Mount

ESCC 3401/095 - VARIANT 03

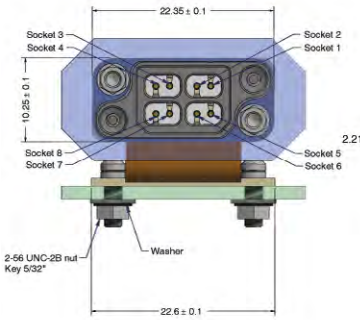

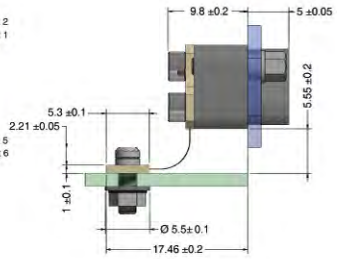

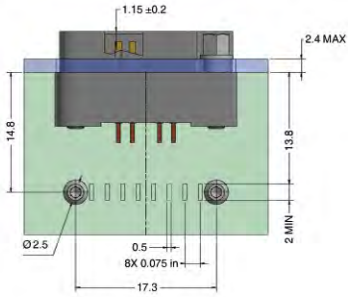

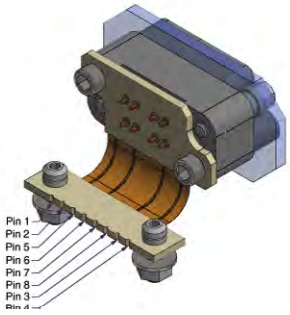

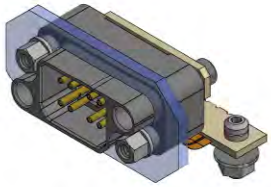

MicroMach® Saver

ESCC 3401/096 - VARIANT 01

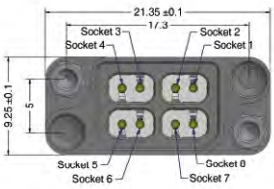

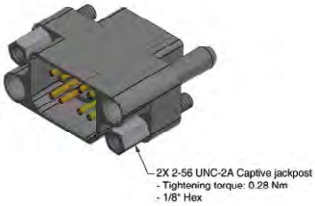

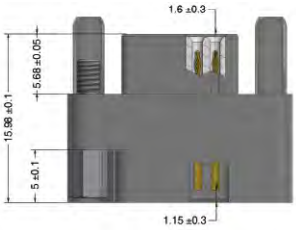

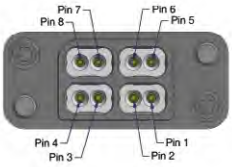

Dimensions in mm. All ESCC specifications are subject to change. Please refer to https://escies.org for latest specifications.

© 2013, AXON' CABLE - RELEASED JUNE 2021/H

AXOMACH®

For even higher data rates, Axon' offers AxoMach®, a range of very high speed links composed of low loss microwave coaxial cables and different connector types. They are used for standards including SpaceWire, Wizardlink & SpaceFibre.

INLINE FEMALE AXOMACH® CONNECTOR

Faster data transmission

Aimed, for example, at the interconnection of high definition imagery sensors in satellites these links present the following main advantages:

- Transmission of high data rates: 10 Gb/s up to 40 Gb/s,
- Signal integrity: skew < 10 ps per mated pair,
- Low mismatching: differential characteristic impedance 100 Ω (±10 Ω),
- Low crosstalk better than -35 dB at 10 GHz,
- Improved EMC behavior: shielding effectiveness for 1 m link < -60 dB up to 10 GHz,
- Space saving: about half the width of a standard SMA connector for the same number of contacts.

Construction

AXOMACH® high data rate links are made with:

- Microwave coaxial cables
- And different connector types: AXOMACH® inline version, panel mount, SMD or saver connectors as well as SMA panel mount connectors

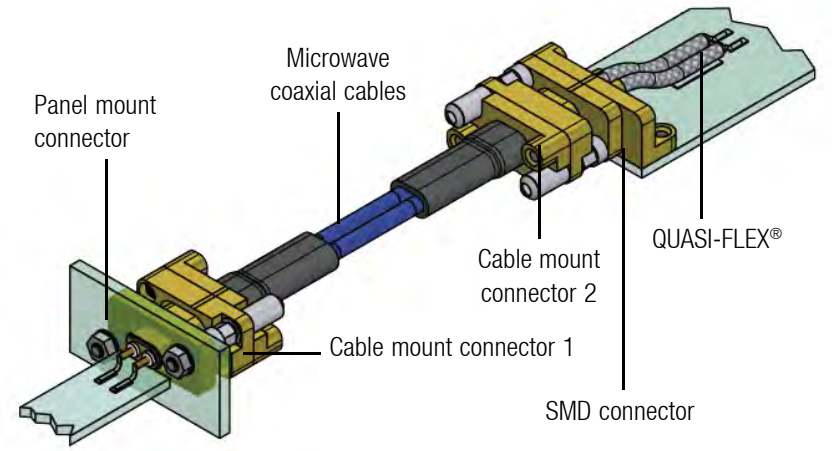

A procurement specification is available on request. This document following ESCC format details the rating, physical and electrical characteristics, test & inspection data for AXON' space grade high data rate AXOMACH® series connectors and links.

On the following pages each component of this high data rate link will be described in detail.

axon' cable & interconnect

© 2013, AXON' CABLE - RELEASED JUNE 2021/H

Microwave coaxial cable

SC25SP

AXON' part number: P840563

Cable suitable for termination to AxoMach® inline connectors, PCB connectors, SMA connectors.

CONDUCTOR

- Silver plated copper (Ag 2µm).
- AWG 2401.
- Area 0.205 mm².
- Resistance: 10 Ω/100 m.

DIELECTRIC

- Extruded CELLOFLON® (expanded PTFE).
- Colour: natural.
- Nominal diameter: 1.51 mm.

SHIELDING

Silver plated copper tape.

SEPARATING TAPE

Polyimide.

SHIELDING

Silver plated copper braid (Ag 2µm).

JACKET

- PFA.
- Colour: blue.

MAIN CHARACTERISTICS

- Nominal outer diameter: 2.50 mm.
- Maximum weight: 17 g/m.
- Nominal impedance: 50 Ω.
- Nominal capacitance: 87 pF/m.
- Temperature rating: -65°C to +150°C.
- Maximum attenuation:
  - 0.70 dB/m at 1 GHz.
  - 1.55 dB/m at 5 GHz.
  - 2.20 dB/m at 10 GHz.
  - 3.05 dB/m at 18 GHz.
- Velocity of propagation: > 76%.

© 2013, AXON' CABLE - RELEASED JUNE 2021/H

QUASI-FLEX® hand-formable semi-rigid substitute

SH22SW
AXON' part number: P540264
Cable connected to a PCB connector on one side and welded to the equipment PCB on the other side.

CONDUCTOR

- Solid conductor.
- Silver plated copper clad steel (Ag 2µm).
- Nominal diameter: 0.51 mm.

DIELECTRIC

- Extruded PTFE.
- Nominal diameter: 1.65 mm.

SHIELDING

Tin soaked silver plated copper braid (space quality defined by ECSS-Q-10-71 A).

MAIN CHARACTERISTICS

- Nominal outer diameter: 2.15 mm.
- Approximate weight: 17 g/m.
- Impedance: 50 Ω (± 2 Ω).
- Nominal capacitance: 97 pF/m.
- Temperature rating: -55°C to +125°C.
- Maximum attenuation:
    - 0.70 dB/m at 1 GHz.
    - 1.30 dB/m at 3 GHz.
    - 1.85 dB/m at 6 GHz.
    - 2.45 dB/m at 10 GHz.
    - 3.55 dB/m at 18 GHz.
- Velocity of propagation: > 69%.

© 2013, AXON' CABLE - RELEASED JUNE 2021/H

AXOMACH®
cable assemblies

- Special 100 Ω (2 x 50) inserts for the transmission line
- EMI gasket / connector to backshell interface seals: conductive silicone base rubber
- Shrinkable strain relief: fluoropolymer

Materials:
- Body: gold on aluminium alloy
- Dielectric: PTFE
- Pin contact: gold on copper alloy
- Hardware: stainless steel

Single way male inline plug
ESCC 3409/001 - CONNECTOR CODE 01 (see details page F-38)

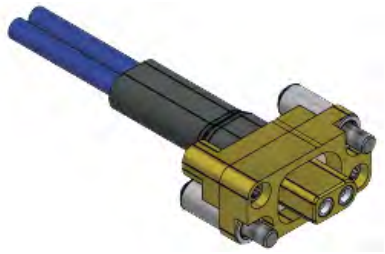

Two way male inline plug
ESCC 3409/001 - CONNECTOR CODE 02 (see details page F-38)

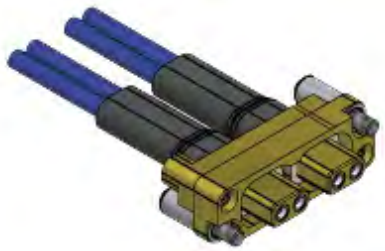

Four way male inline plug
ESCC 3409/001 - CONNECTOR CODE 03 (see details page F-39)

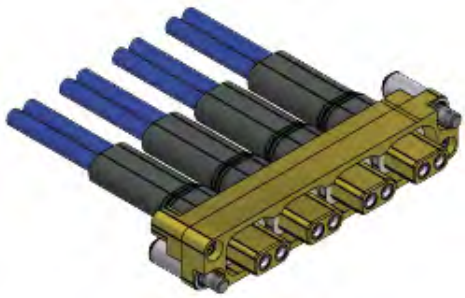

© 2013, AXON' CABLE - RELEASED JUNE 2021/H

Single way female inline jack

ESCC 3409/001 - CONNECTOR CODE 04 (see details page F-39)

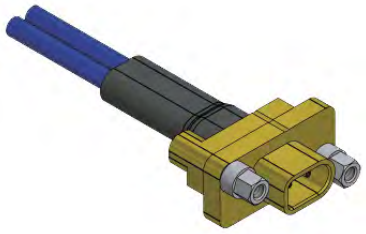

Two way female inline jack

ESCC 3409/001 - CONNECTOR CODE 05 (see details page F-40)

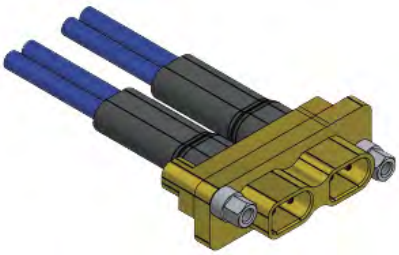

Four way female inline jack

ESCC 3409/001 - CONNECTOR CODE 06 (see details page F-40)

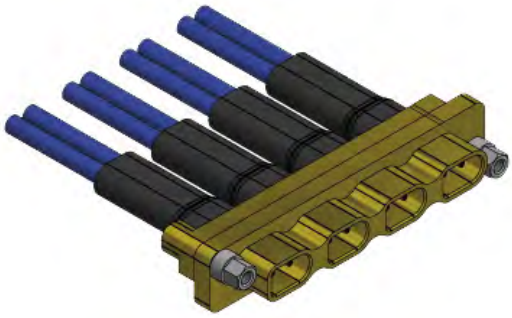

© 2013, AXON' CABLE - RELEASED JUNE 2021/H

Single way female panel mount jack

ESCC 3409/001 - CONNECTOR CODE 07 (see details page F-41)

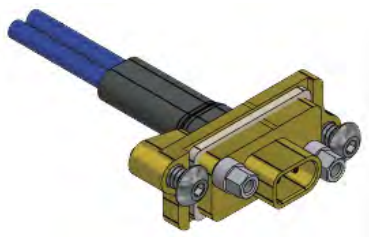

Two way female panel mount jack

ESCC 3409/001 - CONNECTOR CODE 08 (see details page F-41)

Four way female panel mount jack

ESCC 3409/001 - CONNECTOR CODE 09 (see details page F-42)

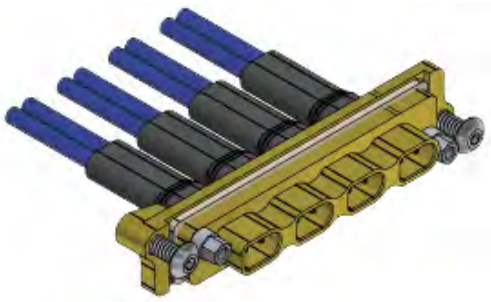

© 2013, AXON' CABLE - RELEASED JUNE 2021/H

Male inline SpaceFibre plug

ESCC 3409/001 - CONNECTOR CODE 10 (see details page F-42)

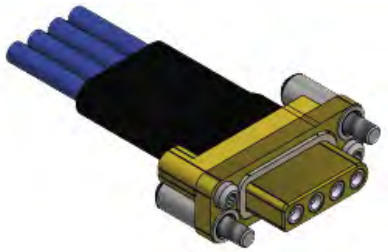

Female inline SpaceFibre jack

ESCC 3409/001 - CONNECTOR CODE 11 (see details page F-43)

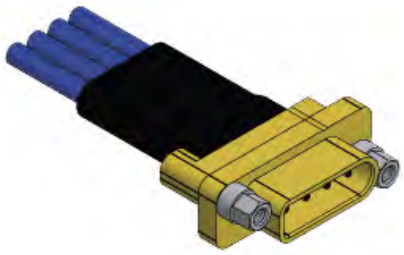

Straight male SMA plug

ESCC 3409/001 - CONNECTOR CODE 17 (see details page F-43)

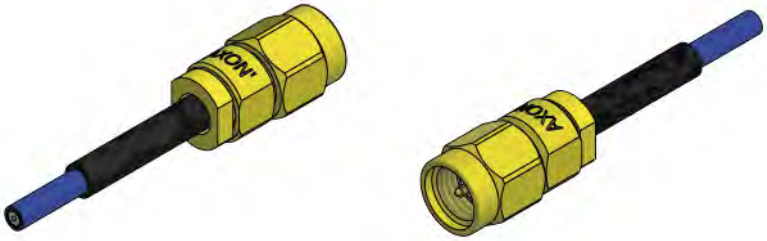

Female panel mount SpaceFibre jack

ESCC 3409/001 - CONNECTOR CODE 18 (see details page F-44)

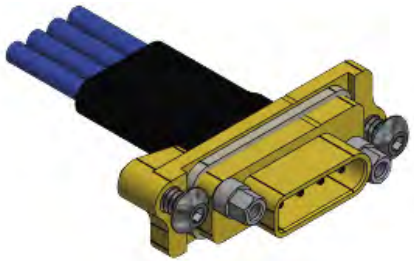

© 2013, AXON' CABLE - RELEASED JUNE 2021/H

AXOMACH® panel mount & SMD connectors

Materials:
- Body: gold on aluminium alloy
- Dielectric: PTFE
- Mated contact: gold on copper alloy
- Hardware: stainless steel

Single way female panel mount jack

ESCC 3401/089 - VARIANT 01 (see details page F-45)

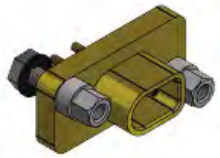

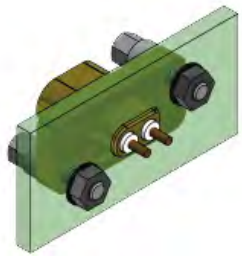

Two way female panel mount jack

ESCC 3401/089 - VARIANT 02 (see details page F-45)

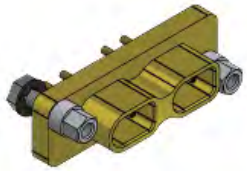

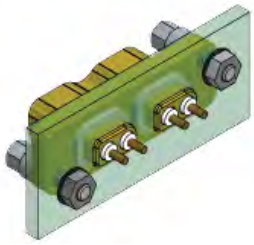

Four way female panel mount jack

ESCC 3401/089 - VARIANT 03 (see details page F-46)

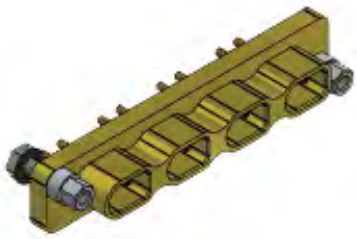

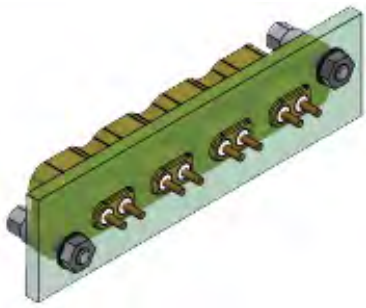

© 2013, AXON' CABLE - RELEASED JUNE 2021/H

Female panel mount SpaceFibre jack

ESCC 3401/089 - VARIANT 04 (see details page F-46)

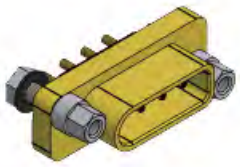

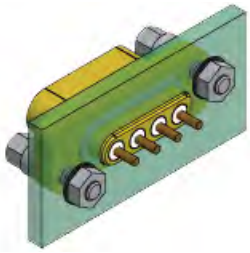

Single way female SMD jack

ESCC 3401/089 - VARIANT 05 (see details page F-47)

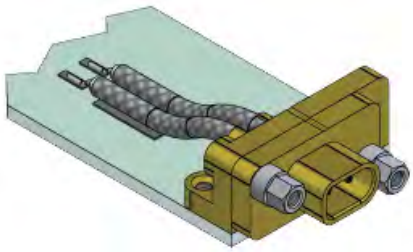

Two way female SMD jack

ESCC 3401/089 - VARIANT 06 (see details page F-47)

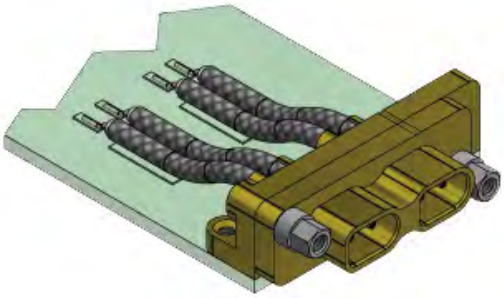

© 2013, AXON' CABLE - RELEASED JUNE 2021/H

Four way female SMD jack

ESCC 3401/089 - VARIANT 07 (see details page F-48)

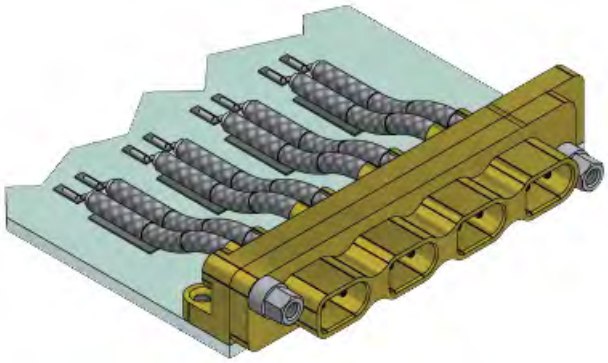

Female SMD SpaceFibre jack

ESCC 3401/089 - VARIANT 08 (see details page F-48)

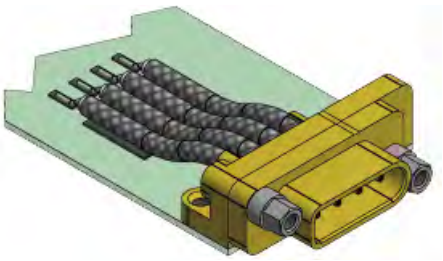

© 2013, AXON' CABLE - RELEASED JUNE 2021/H

AXOMACH® savers

Materials:
- Body: gold on aluminium alloy
- Dielectric: PTFE
- Mated contact: gold on copper alloy
- Hardware: stainless steel

Single way connector saver

ESCC 3401/090 - VARIANT 01 (see details page F-49)

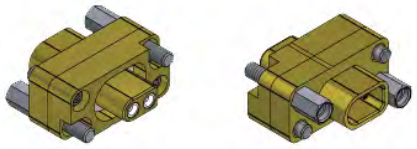

Two way connector saver

ESCC 3401/090 - VARIANT 02 (see details page F-49)

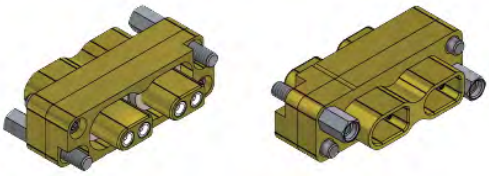

Four way connector saver

ESCC 3401/090 - VARIANT 03 (see details page F-50)

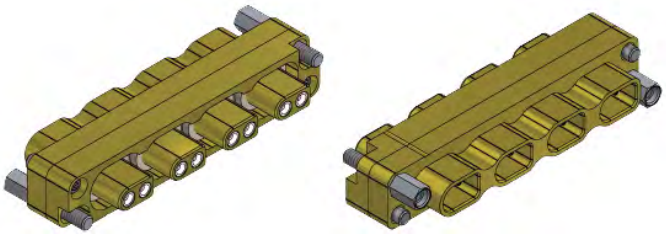

SpaceFibre connector saver

ESCC 3401/090 - VARIANT 07 (see details page F-52)

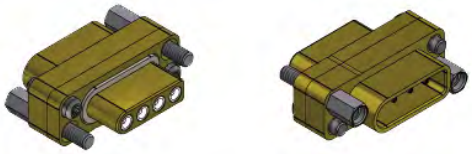

© 2013, AXON' CABLE - RELEASED JUNE 2021/H

AXOMACH®
blanking plates

Materials:
- Body: gold on aluminium alloy
- Dielectric: PTFE
- Mated contact: gold on copper alloy
- Hardware: stainless steel

Blanking plate for single way connectors
ESCC 3401/090 - VARIANT 04 (see details page F-50)

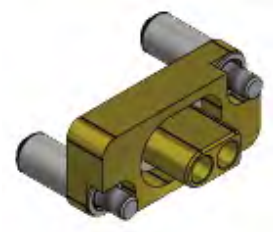

Blanking plate for two way connectors
ESCC 3401/090 - VARIANT 05 (see details page F-51)

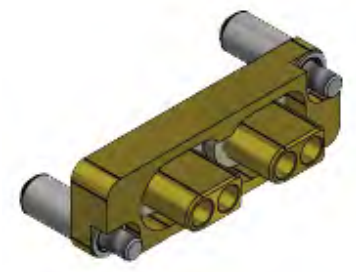

Blanking plate for four way connectors
ESCC 3401/090 - VARIANT 06 (see details page F-51)

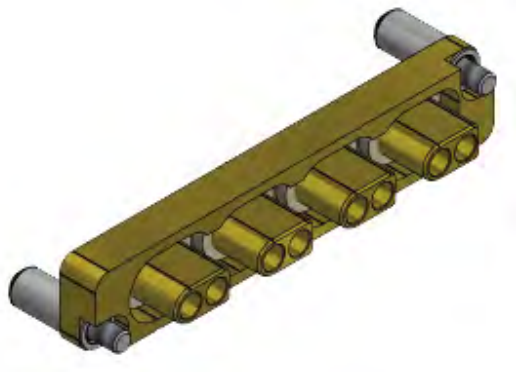

© 2013, AXON' CABLE - RELEASED JUNE 2021/H

Detailed AXOMACH® connector specifications

Single way male inline plug
ESCC 3409/001 - CONNECTOR CODE 01

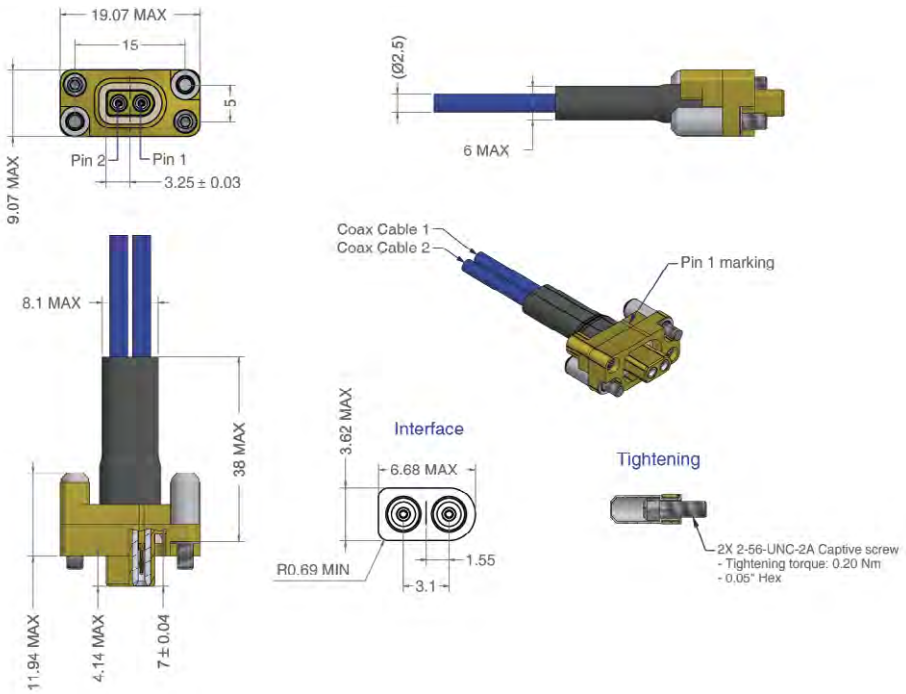

Two way male inline plug
ESCC 3409/001 - CONNECTOR CODE 02

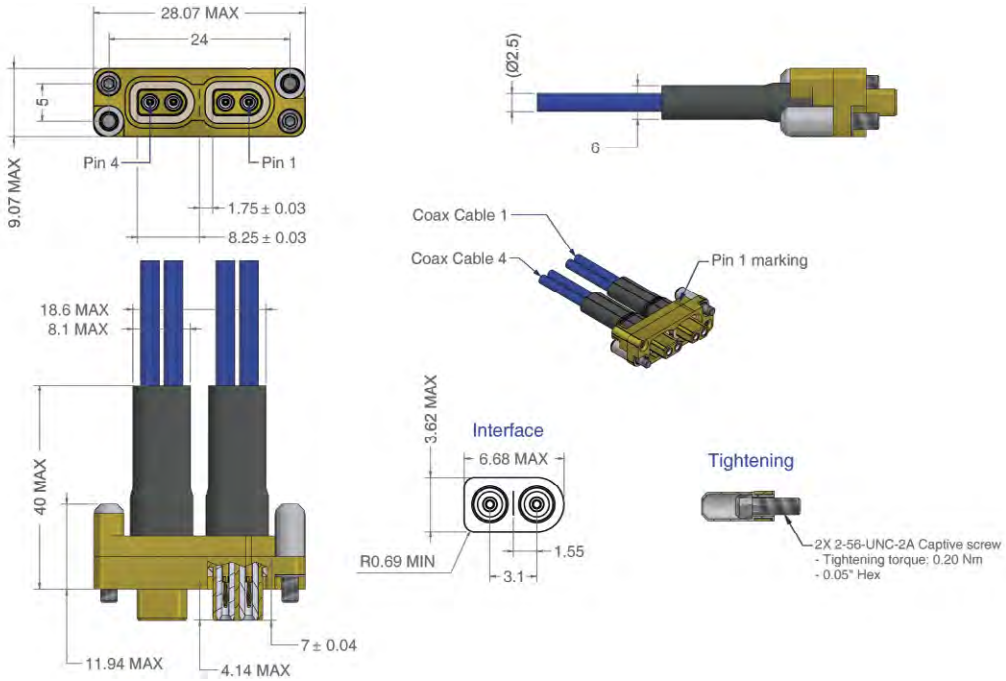

Dimensions in mm. All ESCC specifications are subject to change. Please refer to https://escies.org for latest specifications.

© 2013, AXON' CABLE - RELEASED JUNE 2021/H

Four way male inline plug
ESCC 3409/001 - CONNECTOR CODE 03

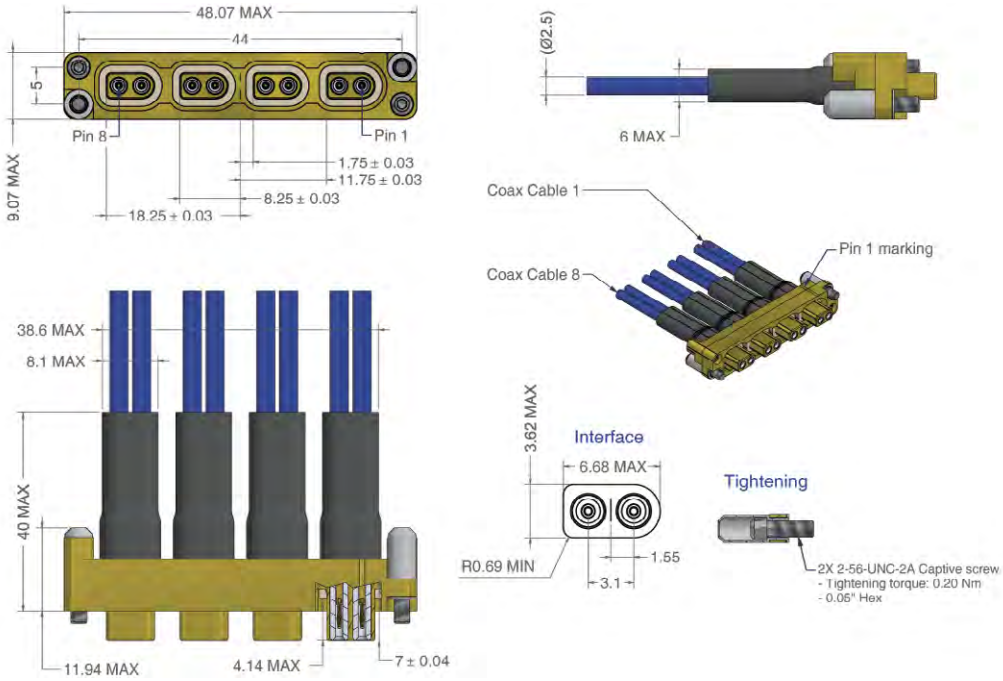

Single way female inline jack
ESCC 3409/001 - CONNECTOR CODE 04

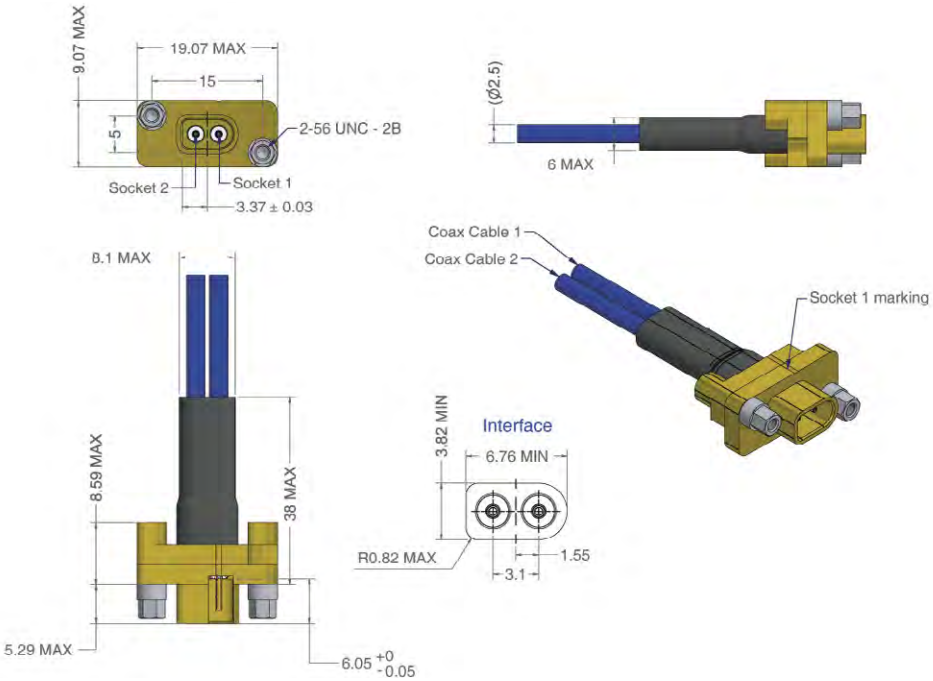

Dimensions in mm. All ESCC specifications are subject to change. Please refer to https://escies.org for latest specifications.

© 2013, AXON' CABLE - RELEASED JUNE 2021/H

Two way female inline jack
ESCC 3409/001 - CONNECTOR CODE 05

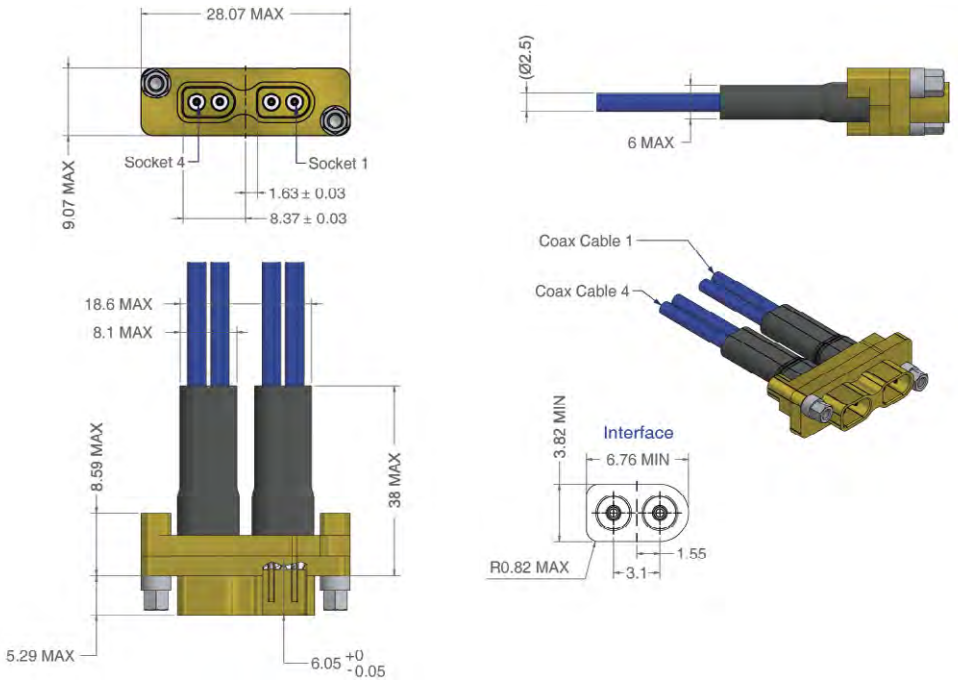

Four way female inline jack
ESCC 3409/001 - CONNECTOR CODE 06

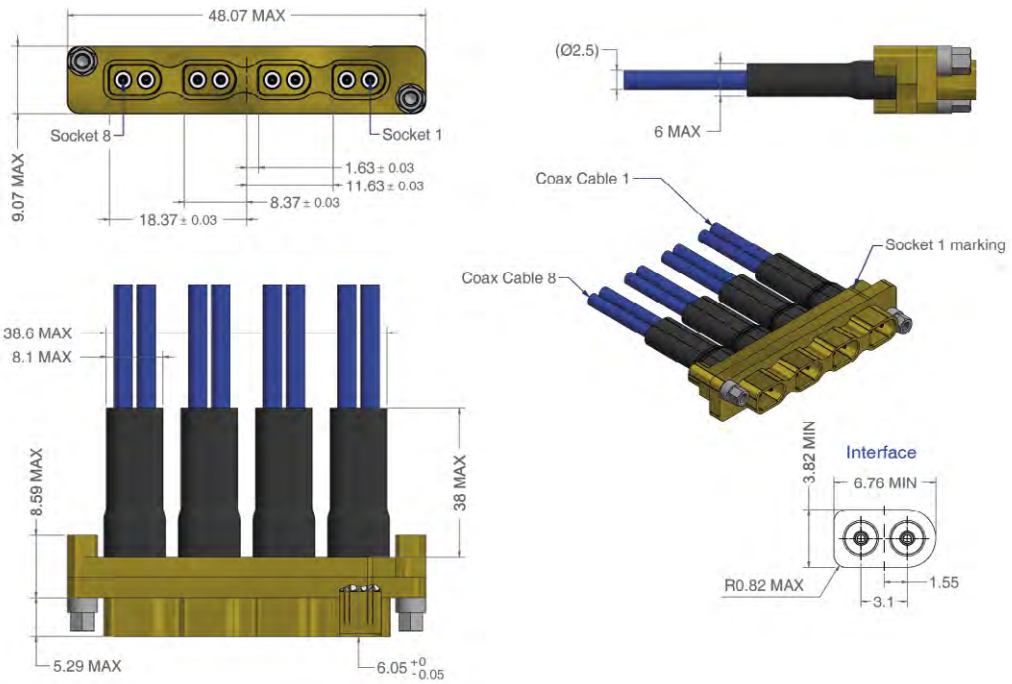

Dimensions in mm. All ESCC specifications are subject to change. Please refer to https://escies.org for latest specifications.

axon' cable & interconnect
© 2013, AXON' CABLE - RELEASED JUNE 2021/H

Single way female panel mount jack
ESCC 3409/001 - CONNECTOR CODE 07

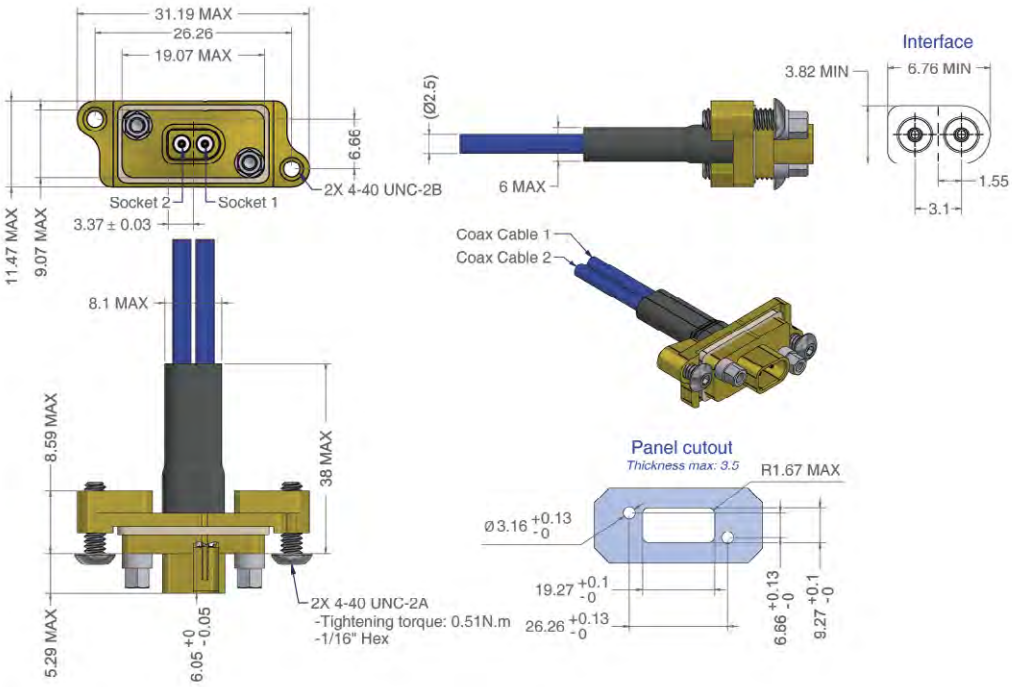

Two way female panel mount jack
ESCC 3409/001 - CONNECTOR CODE 08

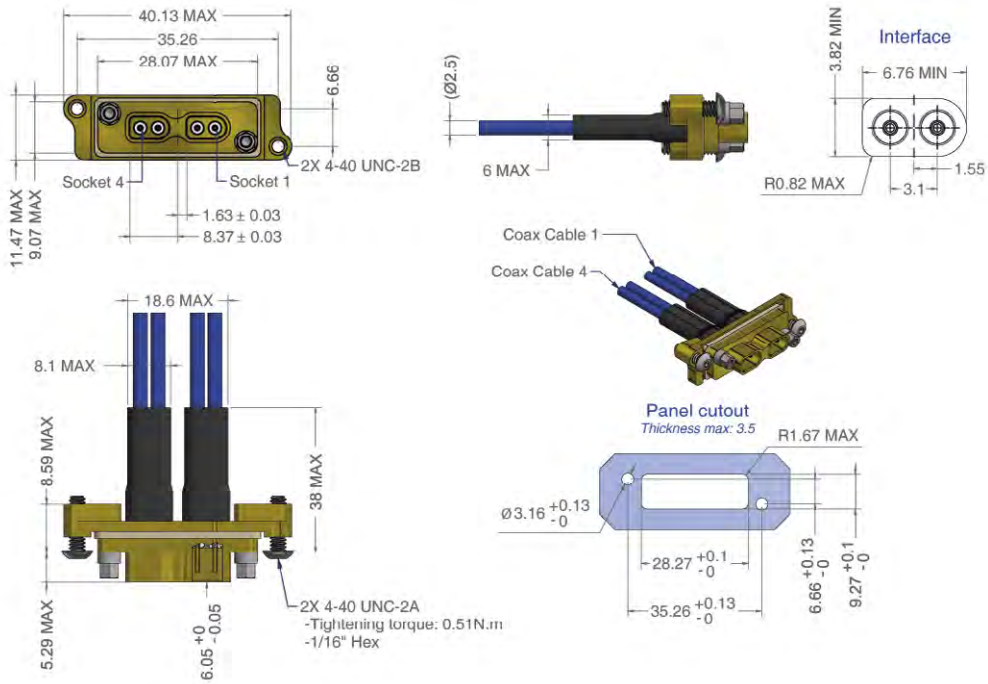

Dimensions in mm. All ESCC specifications are subject to change. Please refer to https://escies.org for latest specifications.

© 2013, AXON' CABLE - RELEASED JUNE 2021/H

Four way female panel mount jack
ESCC 3409/001 - CONNECTO CODE 09

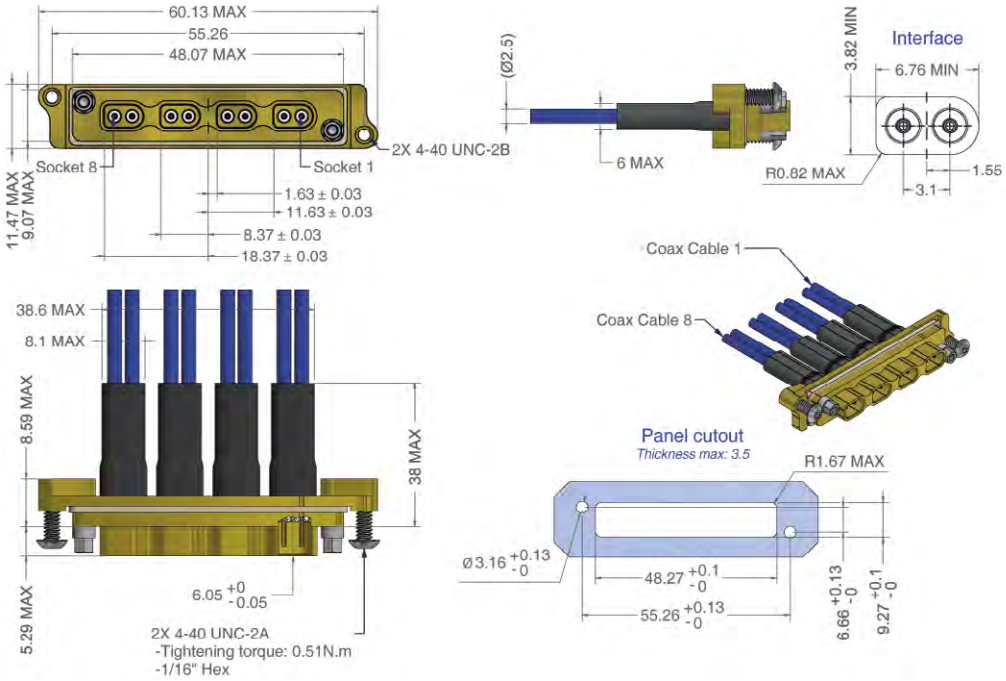

Male inline SpaceFibre plug
ESCC 3409/001 - CONNECTOR CODE 10

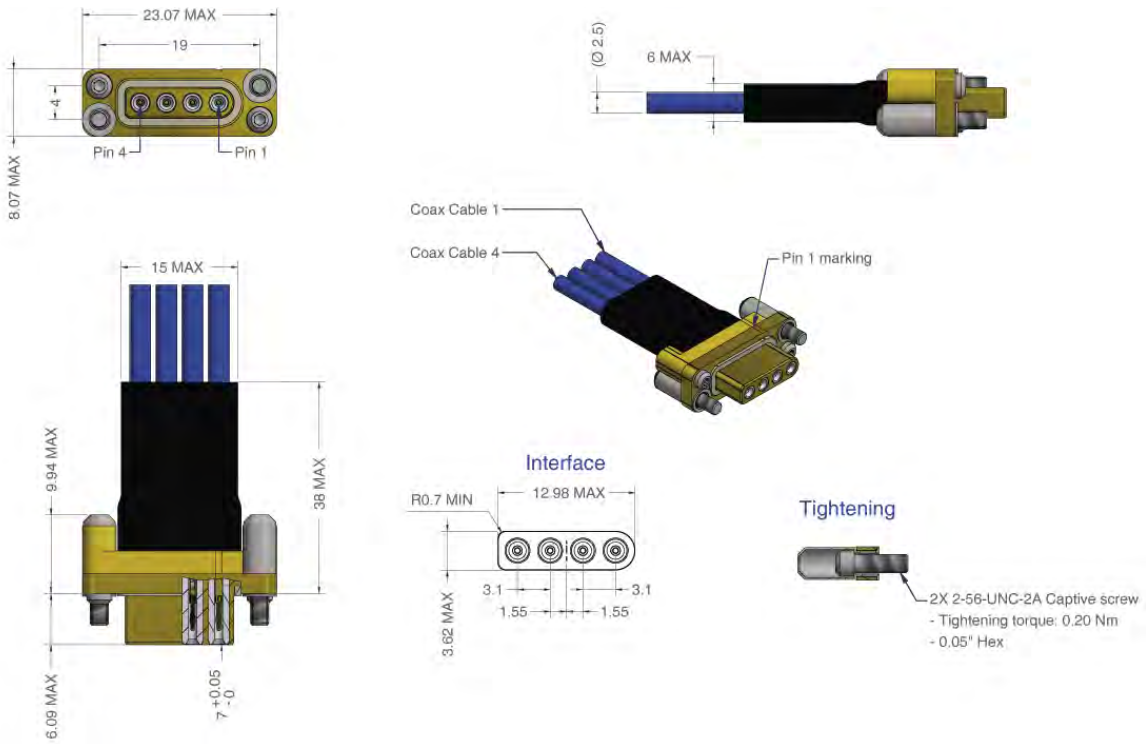

Dimensions in mm. All ESCC specifications are subject to change. Please refer to https://escies.org for latest specifications.

© 2013, AXON' CABLE - RELEASED JUNE 2021/H

Female inline SpaceFibre jack
ESCC 3409/001 - CONNECTOR CODE 11

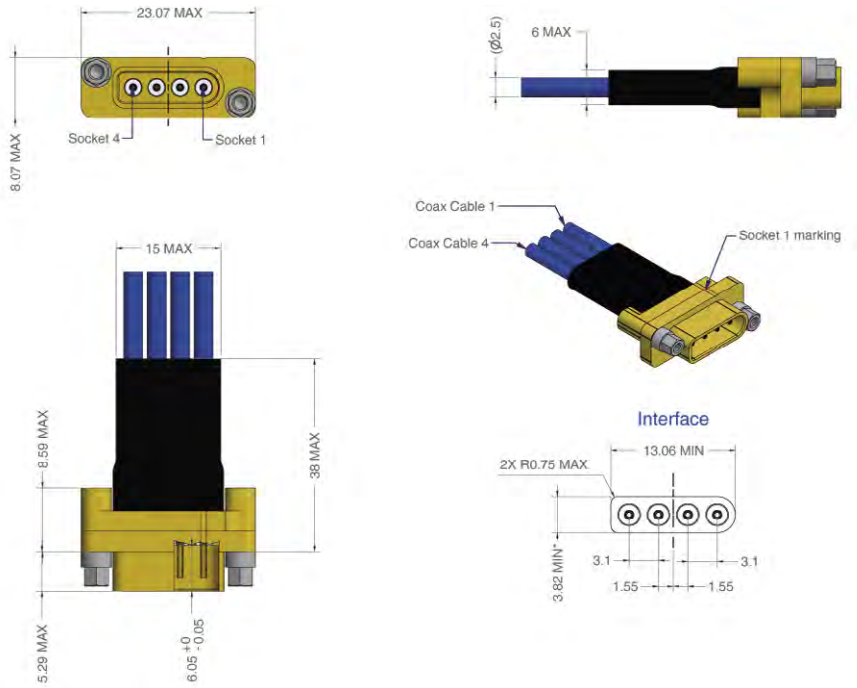

Straight male SMA plug
ESCC 3409/001 - CONNECTOR CODE 17

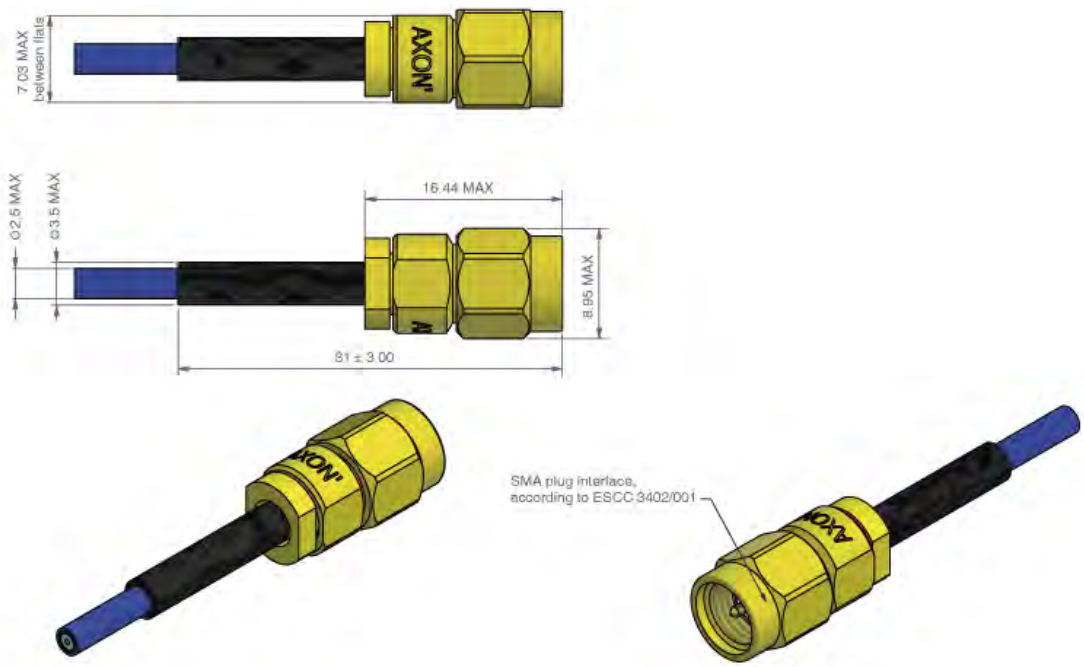

Dimensions in mm. All ESCC specifications are subject to change. Please refer to https://escies.org for latest specifications.

© 2013, AXON' CABLE - RELEASED JUNE 2021/H

Female panel mount SpaceFibre jack
ESCC 3409/001 - CONNECTOR CODE 18

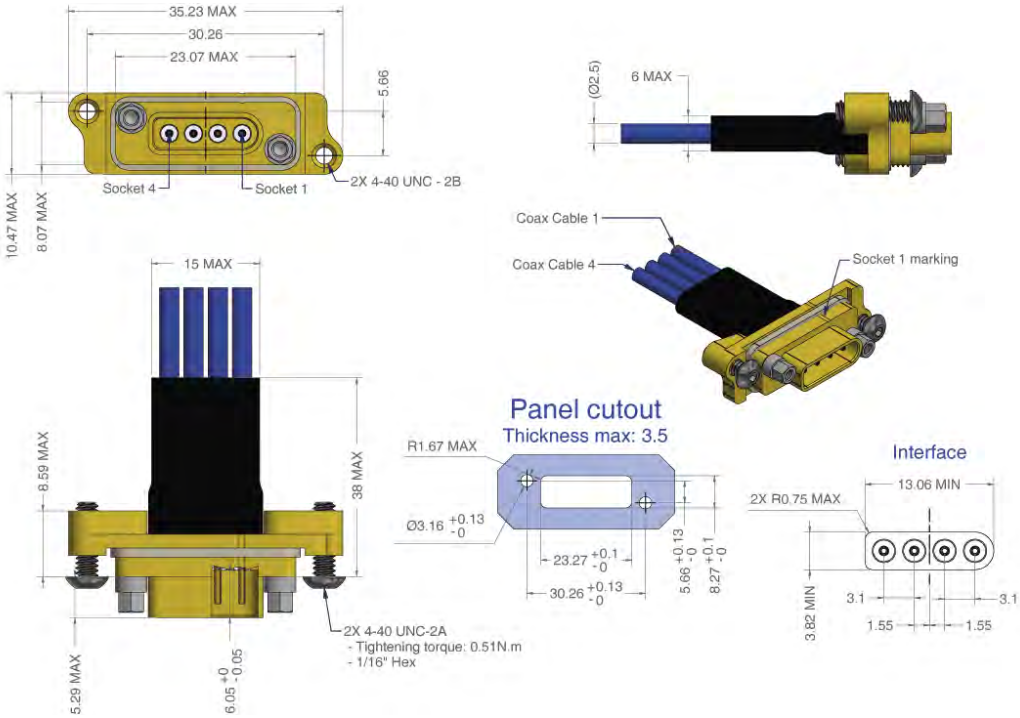

Dimensions in mm. All ESCC specifications are subject to change. Please refer to https://escies.org for latest specifications.

© 2013, AXON' CABLE - RELEASED JUNE 2021/H

AXOMACH® panel mount & SMD connector specifications

Single way female panel mount connector
ESCC 3401/089 - VARIANT 01

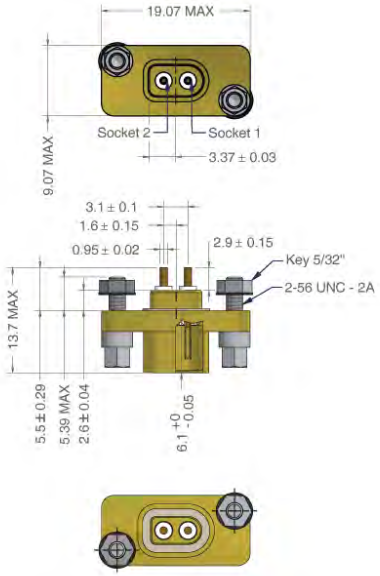

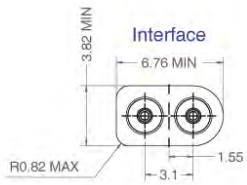

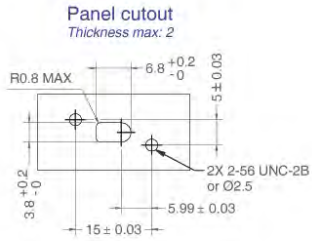

Two way female panel mount connector
ESCC 3401/089 - VARIANT 02

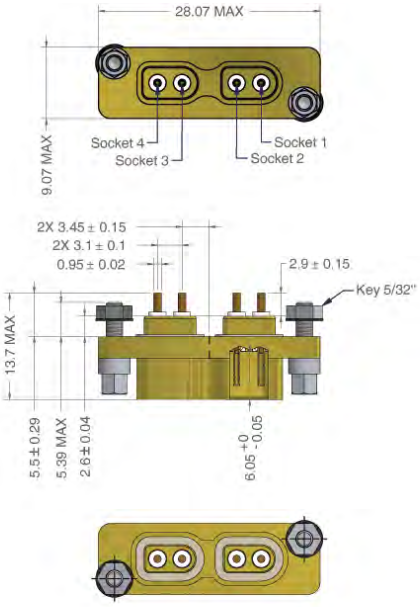

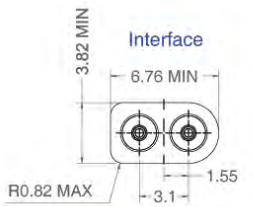

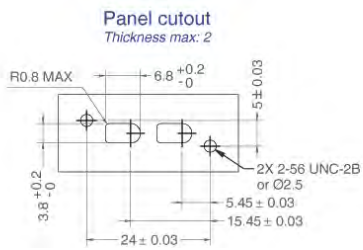

Dimensions in mm. All ESCC specifications are subject to change. Please refer to https://escies.org for latest specifications.

© 2013, AXON' CABLE - RELEASED JUNE 2021/H

Four way female panel mount connector
ESCC 3401/089 - VARIANT 03

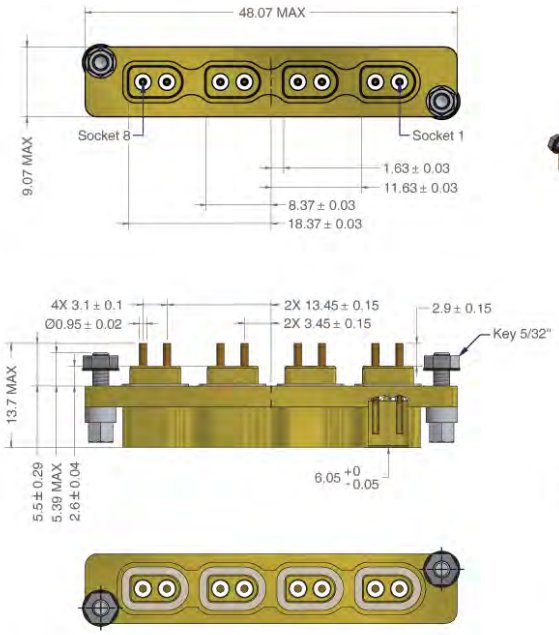

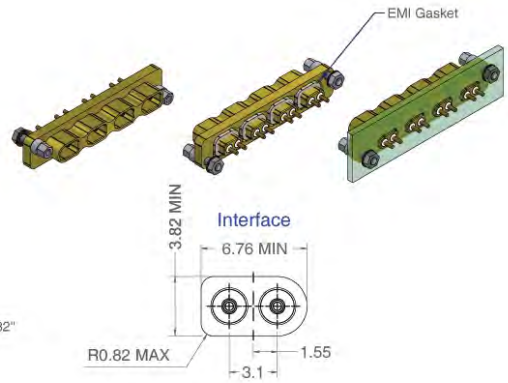

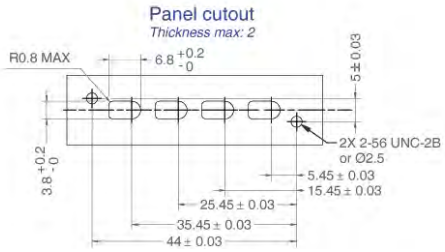

Female panel mount SpaceFibre connector
ESCC 3401/089 - VARIANT 04

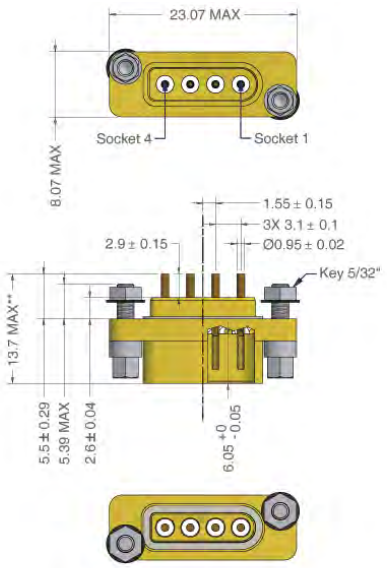

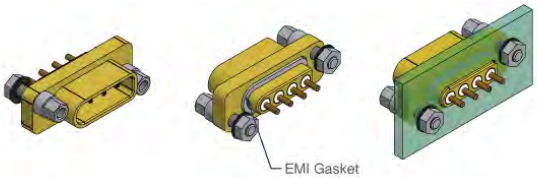

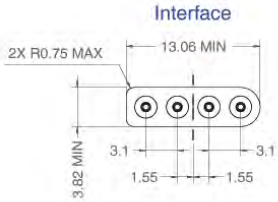

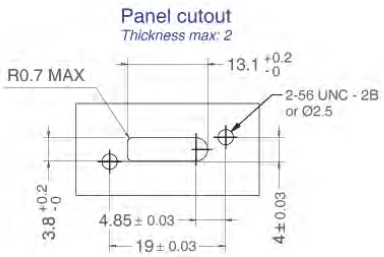

Dimensions in mm. All ESCC specifications are subject to change. Please refer to https://escies.org for latest specifications.

© 2013, AXON' CABLE - RELEASED JUNE 2021/H

Single way female SMD connector
ESCC 3401/089 - VARIANT 05

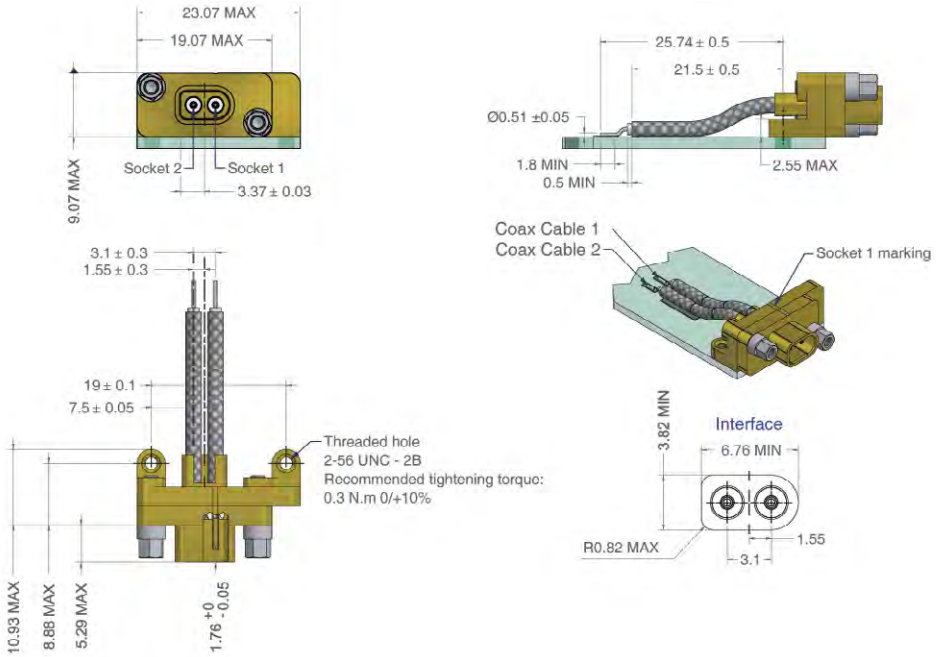

Two way female SMD connector
ESCC 3401/089 - VARIANT 06

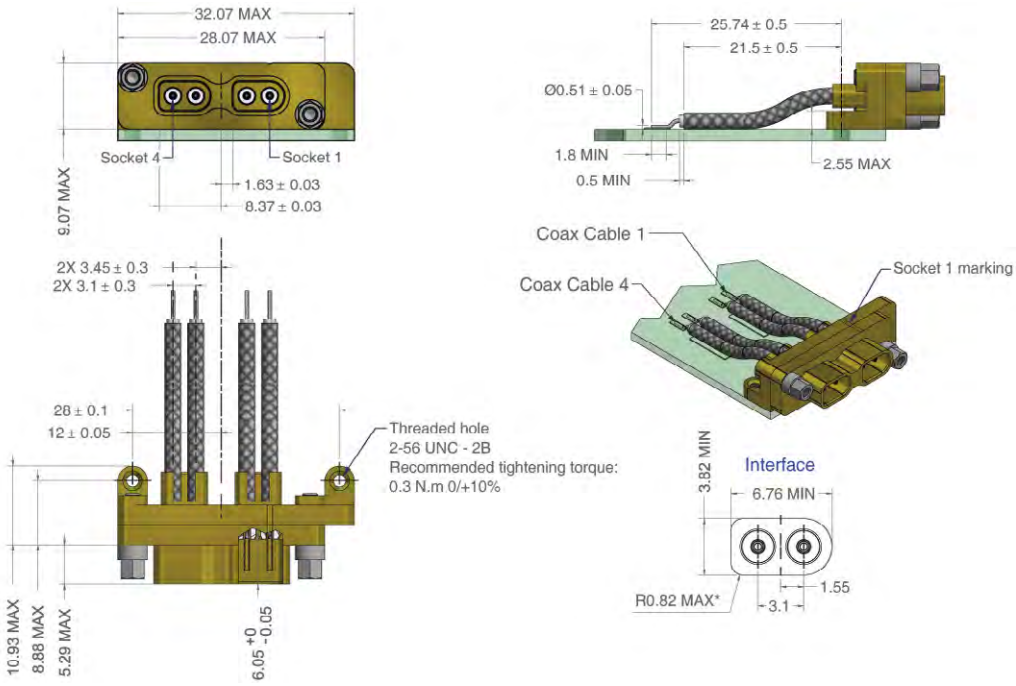

Dimensions in mm. All ESCC specifications are subject to change. Please refer to https://escies.org for latest specifications.

© 2013, AXON' CABLE - RELEASED JUNE 2021/H

Four way female SMD connector
ESCC 3401/089 - VARIANT 07

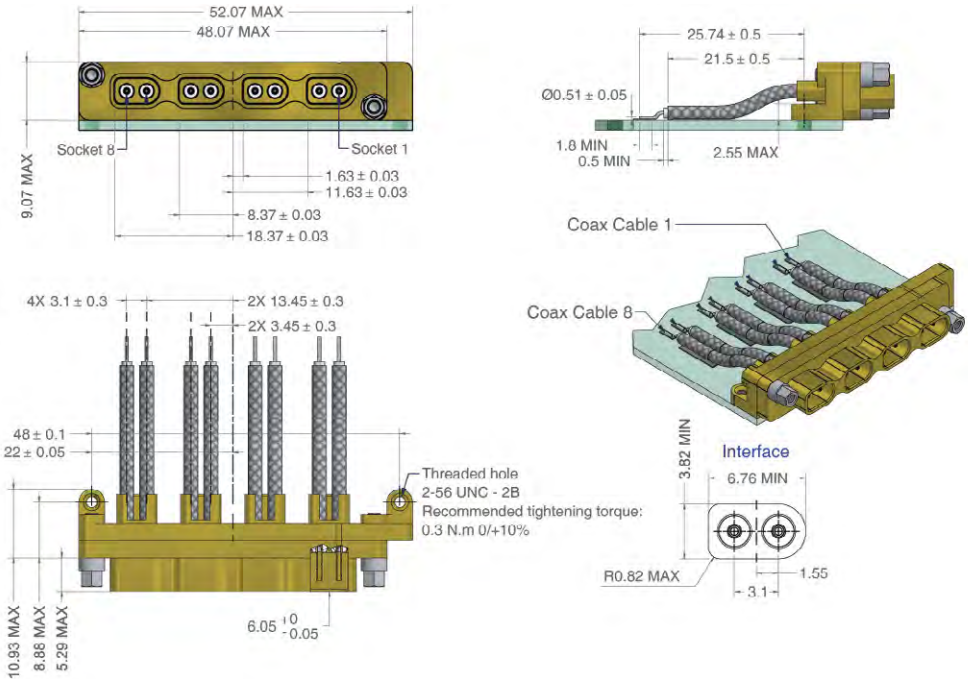

Female SMD SpaceFibre connector
ESCC 3401/089 - VARIANT 08

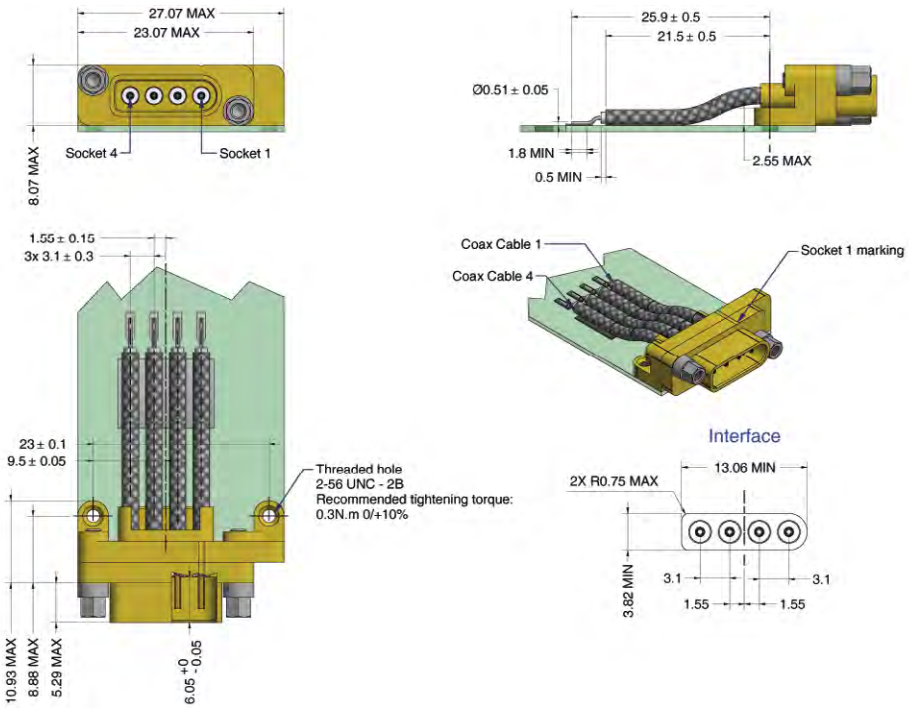

Dimensions in mm. All ESCC specifications are subject to change. Please refer to https://escies.org for latest specifications.

© 2013, AXON' CABLE - RELEASED JUNE 2021/H

Detailed AXOMACH® accessory specifications

Single way connector saver
ESCC 3401/090 - VARIANT 01

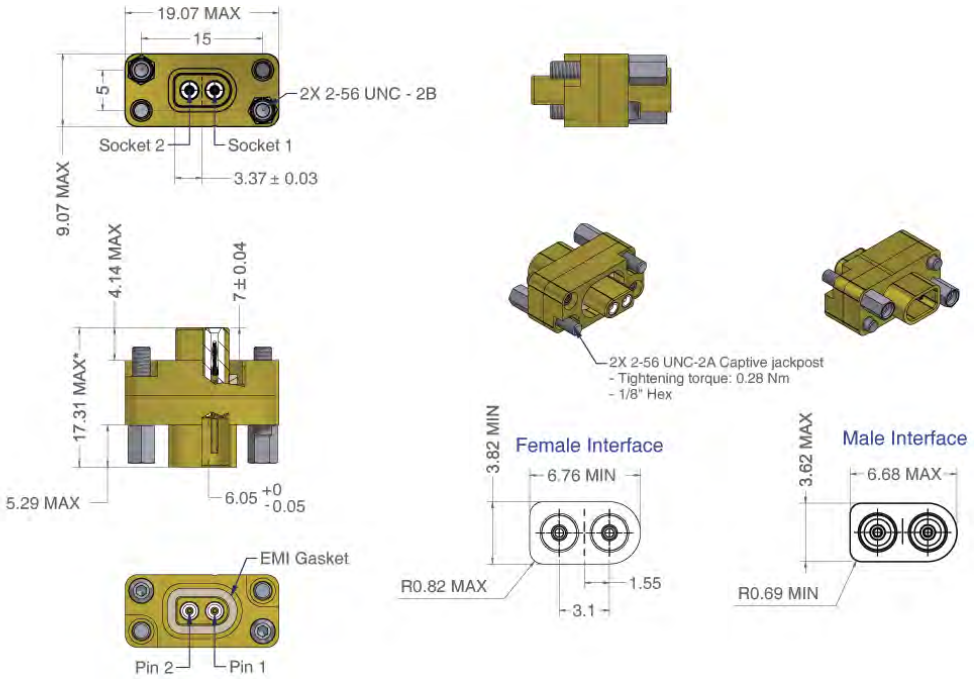

Two way connector saver
ESCC 3401/090 - VARIANT 02

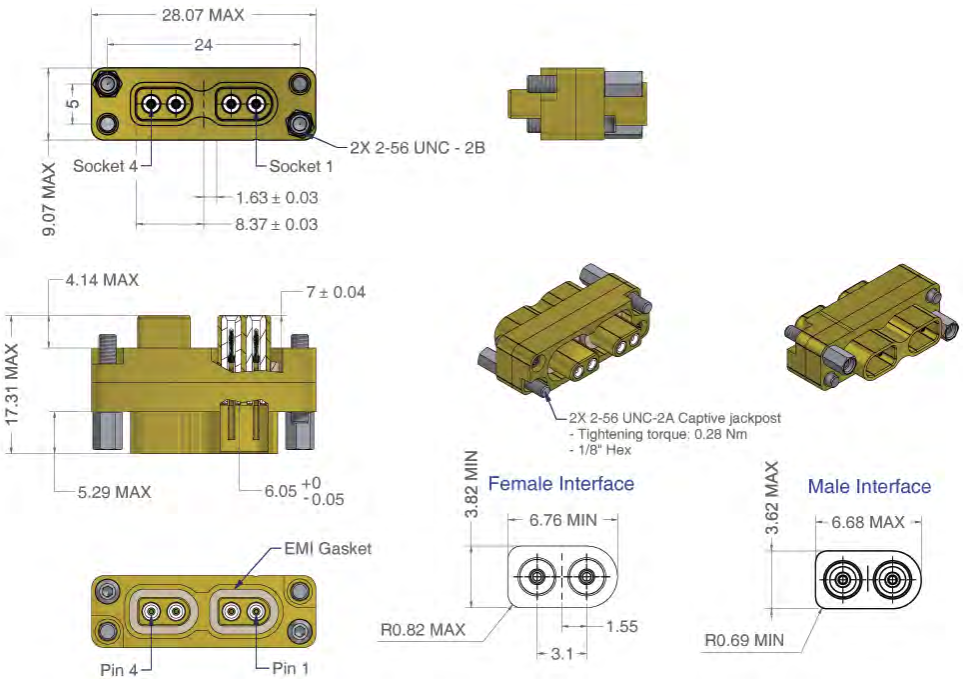

Dimensions in mm. All ESCC specifications are subject to change. Please refer to https://escies.org for latest specifications.

© 2013, AXON' CABLE - RELEASED JUNE 2021/H

Four way connector saver
ESCC 3401/090 - VARIANT 03

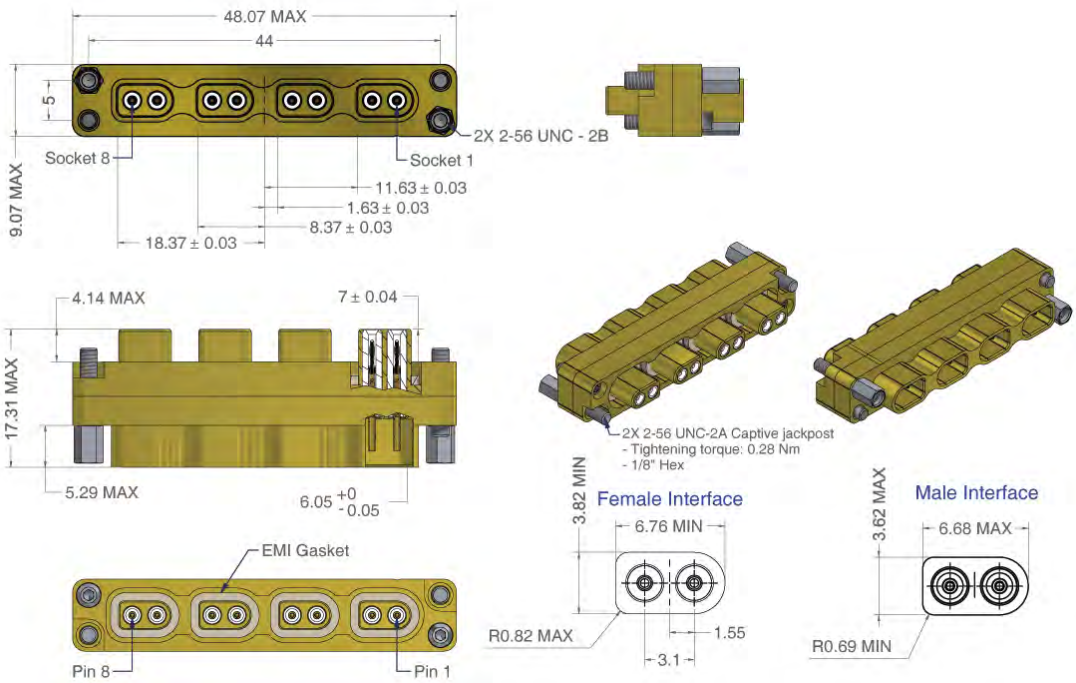

Blanking plate for single way connectors
ESCC 3401/090 - VARIANT 04

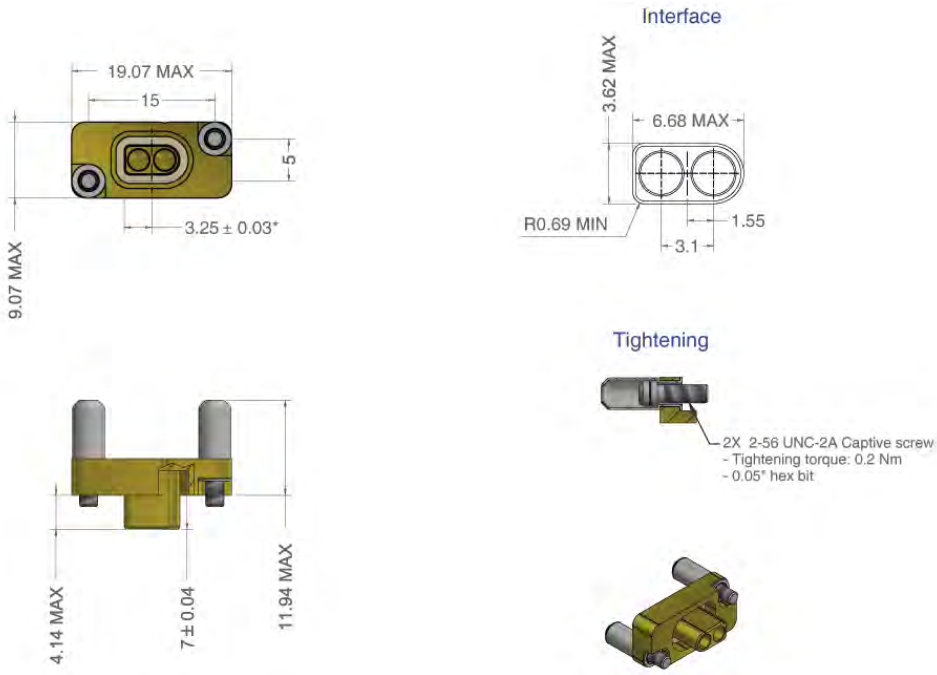

Dimensions in mm. All ESCC specifications are subject to change. Please refer to https://escies.org for latest specifications.

axon' cable & interconnect
© 2013, AXON' CABLE - RELEASED JUNE 2021/H

Blanking plate for two way connectors
ESCC 3401/090 - VARIANT 05

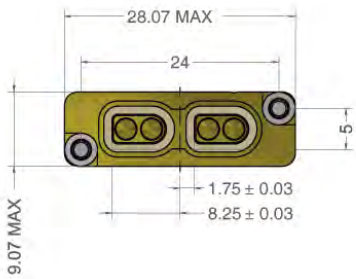

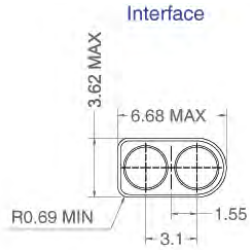

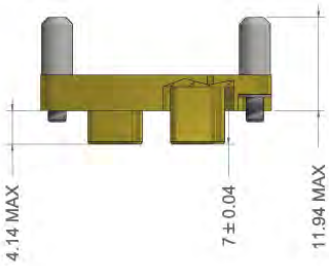

Blanking plate for four way connectors
ESCC 3401/090 - VARIANT 06

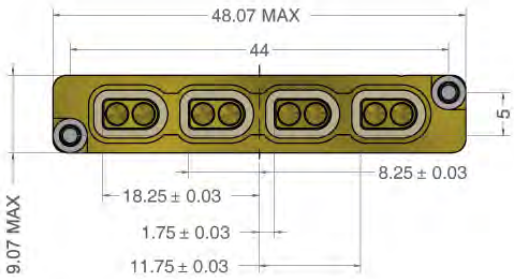

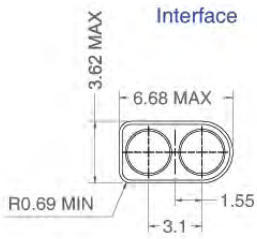

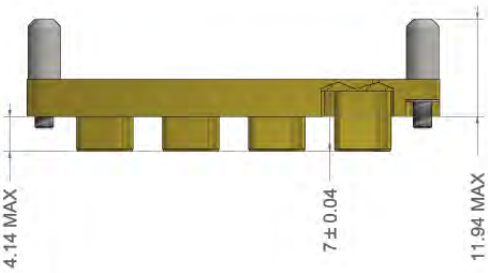

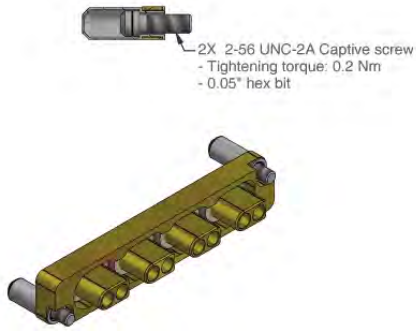

Dimensions in mm. All ESCC specifications are subject to change. Please refer to https://escies.org for latest specifications.

© 2013, AXON' CABLE - RELEASED JUNE 2021/H

SpaceFibre connector saver
ESCC 3401/090 - VARIANT 07

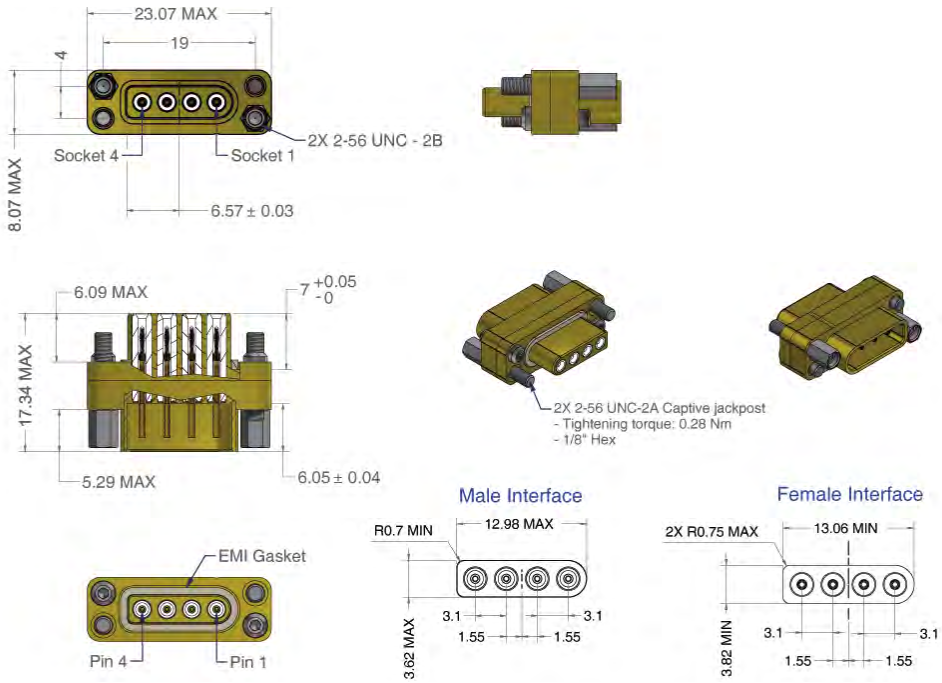

Dimensions in mm. All ESCC specifications are subject to change. Please refer to https://escies.org for latest specifications.

© 2013, AXON' CABLE - RELEASED JUNE 2021/H

SMA connectors (ESCC3402 QPL)

To connect AXOMACH® links to your devices equipped with SMA plugs or to create panel feedthroughs, AXON' proposes the following ESA qualified SMA connectors:

ESCC VARIANT	TECHNICAL CONFIGURATION
ESCC 3402/001 variant 01	Straight plug, solder type, for semi-rigid cable Ø 2.2 mm.
ESCC 3402/001 variant 09	Right angle plug, solder type, for semi-rigid cable Ø 2.2 mm.
ESCC 3402/002 variant 01	Straight jack, solder type, for semi-rigid cable Ø 2.2 mm.
ESCC 3402/002 variant 09	Straight jack, solder type, rear mounting, 2 holes, flange mounted, for semi-rigid cable Ø 2.2 mm.
ESCC 3402/002 variant 68	Straight jack, solder type, rear mounting, flange mounted, for semi-rigid cable Ø 2.2 mm.
ESCC 3402/003 variant 07	Hermetic adaptor, female-female.
ESCC 3402/003 variant 14	Straight bulkhead adaptor, female-female.

This list is non exhaustive.

Termination of the connectors

AXOMACH® panel mount connectors

This connector can be terminated to a PCB using flat flexible conductors in order to be mechanically decoupled between the PCB and the panel where the connector is mounted. One end of the flat conductor is soldered to the connector lead using high temperature solder or a parallel gap weld procedure. The other end is soldered on PCB tracks by using standard soldering.

This termination must be validated and approved depending on the mission environment.

AXOMACH® cable mount connectors and surface mount connectors

- Inner conductor is crimped to gold plated copper alloy contacts.
- Cable shield is soldered into the backshell using soft soldering.
- X-Ray inspection is performed on all link terminations.

Transmission measurements are performed on 100% of manufactured links up to 10 Gb/s. The manufacturing and control procedures are maintained in a PID followed by CNES/ESA and reviewed every two years.

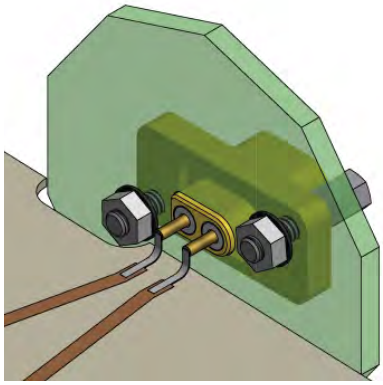

AXOMACH® PANEL CONNECTOR

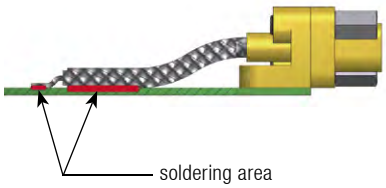

AXOMACH® SMD CONNECTOR

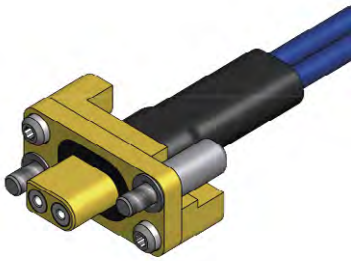

AXOMACH® CABLE MOUNT CONNECTOR

© 2013, AXON' CABLE - RELEASED JUNE 2021/H

Electrical characteristics

Maximum rating for a 1 metre link terminated with two single way cable mount connectors.

CHARACTERISTICS	VALUE	
Characteristic impedance (Zc)	90 Ω < Zc < 100 Ω	
Jitter PP (at 1, 3, 5, 6, 8 and 10 Gb/s)	Maximum 20 ps	
Jitter RMS (at 1, 3, 5, 6, 8 and 10 Gb/s)	Maximum 5 ps	
Quality factor (Qf)	At 1 Gb/s	minimum 20
	At 3 Gb/s	minimum 15
	At 5,6,8 and 10 Gb/s	minimum 10
Skew (Sk) between coaxial cables	Maximum 20 ps	
Insertion Loss (IL)	0 to 5 GHz	maximum -1 dB
	0 to 10 GHz	maximum -2 dB
Return Loss (RL)	0 to 5 GHz	maximum -12 dB
	0 to 10 GHz	maximum -9 dB
Crosstalk far end (xTf - 0 to 5 GHz)	Maximum -45 dB	
Crosstalk near end (xTn - 0 to 10 GHz)	Maximum -35 dB	
Time analysis (jitter and quality factor) at room temperature	*See table below*	

EMC: AXOMACH link shielding efficiency
(from 500 MHz to 18 GHz)

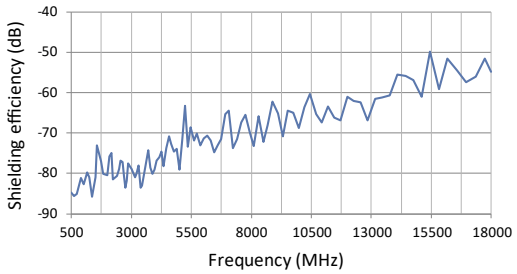

Shielding effectiveness for a 1 metre link < -60 dB up to 10 GHz

Time analysis (jitter & quality factor) at room temperature for a 1 metre link with 0.2 m test jig

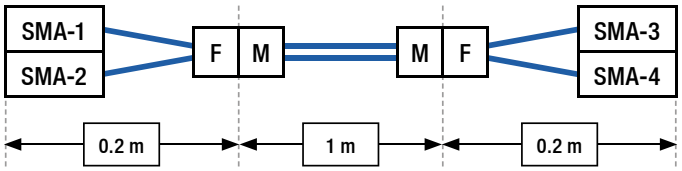

Which data rate for which length ?

This table is a design tool for cable routing and gives indicative values.

	0.5 m	1 m	2 m	3 m	4 m	5 m
1 to 5 Gb/s	✓	✓	✓	✓	✓	✓
6 to 7 Gb/s	✓	✓	✓	✓	✓	×
8 to 10 Gb/s	✓	✓	✓	✓	×	×

Links are measured with CML (Current Mode Logic) driver differential signal amplitude of 600 mVPP (worst case condition) and ±100 mV CML receiver input threshold.

© 2013, AXON' CABLE - RELEASED JUNE 2021/H

DATA RATE	1 Gb/s	3 Gb/s	5 Gb/s	6 Gb/s	8 Gb/s	10 Gb/s
Jitter PP	< 20 ps	< 20 ps	< 20 ps	< 20 ps	< 20 ps	< 20 ps
Jitter RMS	< 5 ps	< 5 ps	< 5 ps	< 5 ps	< 5 ps	< 5 ps
Quality factor	> 20	> 15	> 10	> 10	> 10	> 10
Eye pattern	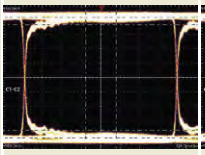	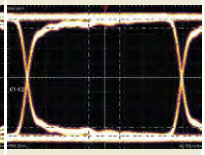	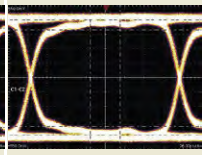	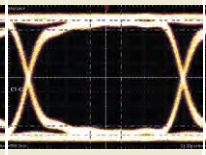	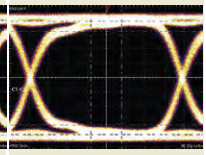	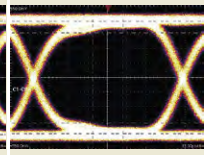
Skew (between coaxial cables)	< 20 ps	< 20 ps	< 20 ps	< 20 ps	< 20 ps	< 20 ps

Generator output signal: 2^{7-1} PRBS pattern with 1VPP differential amplitude.

More information available on request.

Mechanical characteristics

CHARACTERISTICS	VALUE
Maximum cable weight	15 g/m per cable 30 g/m per way
Mating force	< 5.6 N (2.8 N per contact)
Demating force	1 N < demating force < 5.6 N
Operating and storage temperature	-55°C to +125°C
Total Mass Loss (TML) Collected Volatile Condensable Material (CVCM) Recovered Mass Loss (RML)	< 1% < 0.1 % < 1%

See AxoMach® weight table on page F-65

Manufacturing

AXOMACH® components are manufactured and tested in clean room conditions.
Cleanliness level: Class ISO 8 = Class 100 000 following FED STD 209E.

AXON' operators are certified by international space agencies on soldering and crimping process according to ECSS-Q-ST-70-08 & ECSS-Q-ST-70-26.
AXON' is monitored by CNES (French space agency) for AXOMACH® connectors and links manufacturing and controlled according to PID.

© 2013, AXON' CABLE - RELEASED JUNE 2021/H

Qualification

Environmental, mechanical and endurance testing are performed according to ESCC 3409 chart F4A.

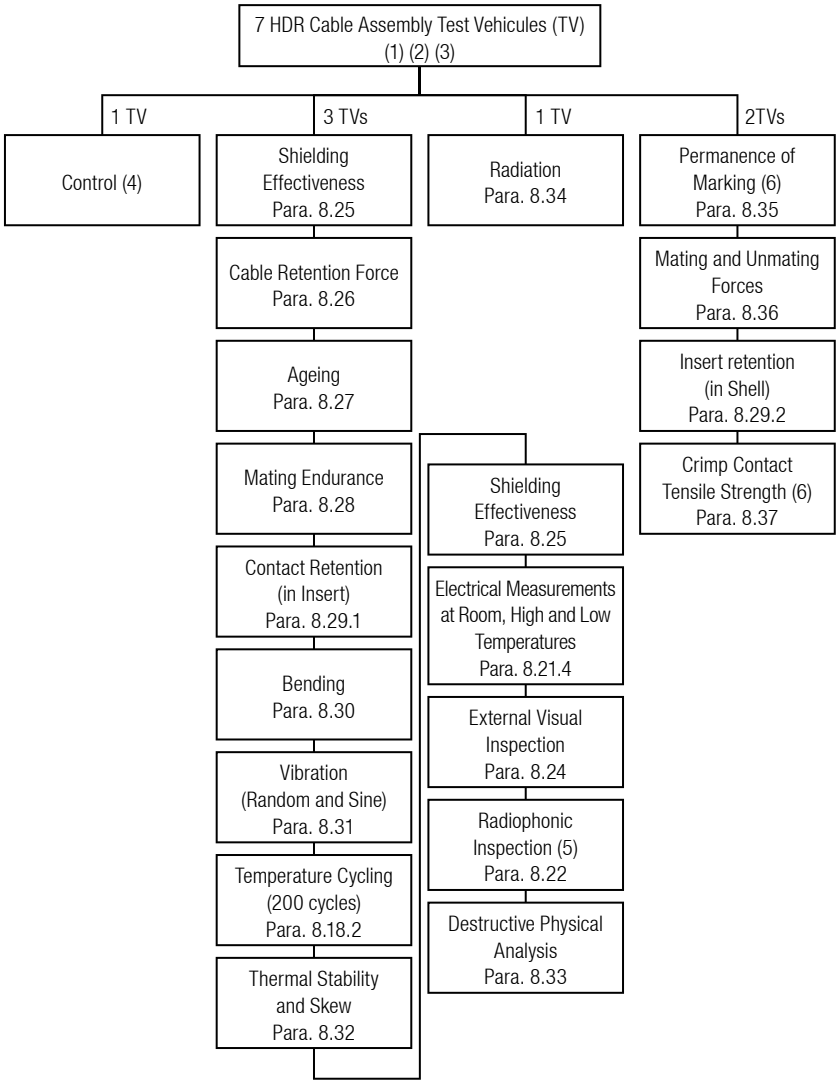

All ESCC specifications are subject to change. Please refer to https://escies.org for latest specifications.

© 2013, AXON' CABLE - RELEASED JUNE 2021/H

Compatibility guide

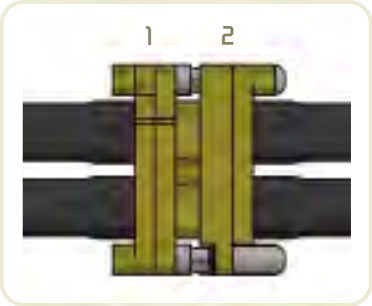

ESCC 3409 / 001 connector mating compatibility

Connector 1 code \ Connector 2 code	01	02	03	04	05	06	07	08	09	10	11	12	13	14	15	16	17	18
01				+			+											
02					+			+										
03						+			+									
04	+																	
05		+																
06			+															
07	+																	
08		+																
09			+															
10											+							+
11										+								
12														+	+	+		
13														+	+	+		
14												+	+				+	
15												+	+				+	
16												+	+				+	
17														+	+	+		
18										+								

Connector 1 code		Connector 2 code	01	02	03	04	05	06	07	08	09	10	11	18
	3401 / 089	01	+											
		02		+										
		03			+									
		04										+		
		05	+											
		06		+										
		07			+									
		08										+		
	3401 / 090	01	+											
		02		+										
		03			+									
		04				+			+					
		05					+			+				
		06						+			+			
		07										+	+	+

© 2013, AXON' CABLE - RELEASED JUNE 2021/H

Cross codification guide

This document relates to AxoMach® High Data Rate products.
Axon' manufactures AxoMach® products with Axon' specification 07072-ST-MDSA-HDR-01.
This specification is expected to be replaced by the following ESCC specifications:

- ESCC 3401/089: Connectors, Electrical, Rectangular, Microminiature, High Data Rate based on AxoMach® & SpaceFibre types,
- ESCC 3401/090: Connector Savers and Accessories, Electrical, Rectangular, Microminiature, High Data Rate based on Axomach® & SpaceFibre types,
- ESCC 3409/001: High Data Rate Cable Assembly with Microminiature, Rectangular Coaxial Connectors based on Axomach® & SpaceFibre types.

The aim of this document is to present the different codifications between those specifications.
Caution: variants of 07072-ST-MDSA-HDR-01 do not necessarily correspond to ESCC specification variants or connector codes.

The main following information are needed when requesting an offer or placing an order:

- Specification reference (07072-ST-MDSA HDR 01 or ESCC specification),
- Variants or connector codes,
- Lengths for cable assembly,
- Wiring for cable assembly.

Notes:

1. ESCC specification also describes SpaceFibre products which are not included into the 07072-ST-MDSA-HDR-01 specification.
2. The variant 01 in ESCC 3409/001 refers to a high data rate cable assembly with a coaxial cable type AXOWAVE SC25SP.

ESCC

Page 1 of 31

CONNECTORS, ELECTRICAL, RECTANGULAR,
MICROMINIATURE, HIGH DATA RATE
(FEMALE COAXIAL CONTACTS)

BASED ON TYPES AXOMACH AND SPACEFIBRE

ESCC Detail Specification No. 3401/089

Issue 1	September 2016

esa

Document Custodian: European Space Agency – see https://escies.org

ESCIES.ORG/

© 2013, AXON' CABLE - RELEASED JUNE 2021/H

Cross codification for AxoMach® connectors

Choose the AxoMach® connector you need. AxoMach® connectors are assembled with coaxial cable(s) type AXOWAVE SC25SP. To order your complete assembly, please refer to pages F-61 and F-62.

Connector type		07072-ST-MDSA HDR-01	ESCC 3409/001
		Variant	Connector Code
AxoMach® HDR, 1-way, Male, In-line Plug	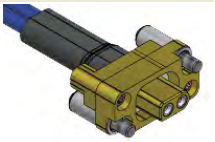	04	01
AxoMach® HDR, 2-way, Male, In-line Plug		05	02
AxoMach® HDR, 4-way, Male, In-line Plug	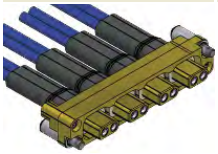	06	03
AxoMach® HDR, 1-way, Female, In-line Jack	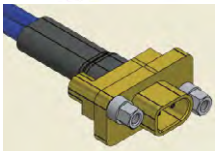	07	04
AxoMach® HDR, 2-way, Female, In-line Jack	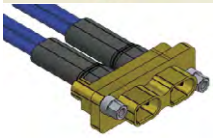	08	05
AxoMach® HDR, 4-way, Female, In-line Jack	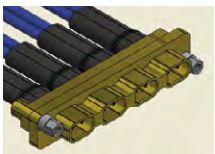	09	06
AxoMach® HDR 1-way, Female, Panel Mount Jack	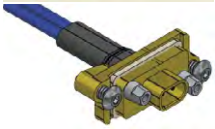	16	07
AxoMach® HDR 2-way, Female, Panel Mount Jack		17	08
AxoMach® HDR 4-way, Female, Panel Mount Jack	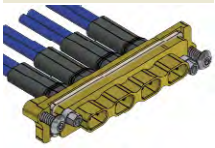	18	09

© 2013, AXON' CABLE - RELEASED JUNE 2021/H

Cross codification for SpaceFibre and coaxial connectors

Choose the very connector you need. AxoMach® connectors are assembled with coaxial cable(s) type AXOWAVE SC25SP. To order your complete assembly, please refer to pages F-61 and F-62.

Connector type		07072-ST-MDSA HDR-01	ESCC 3409/001
		Variant	Connector Code
SpaceFibre HDR, Male, In-line Plug	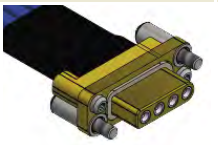	N/A	10
SpaceFibre HDR, Female, In-line Jack	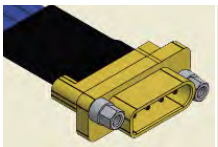	N/A	11
SMA Connector, Male, Straight Plug ESCC 340200101B		20 340200101B	12
SMA Connector, Male, Right Angle Plug ESCC 340200109B	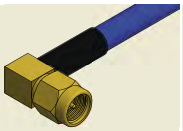	20 340200109B	13
SMA Connector, Female, Straight Jack ESCC 340200201B		20 340200201B	14
SMA Connector, Female, Straight Jack, Back Mounting, 2-Hole Flange-Mounted ESCC 340200209B	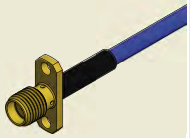	20 340200209B	15
SMA Connector, Female, Straight Jack, Back Mounting, 4-Hole Flange-Mounted ESCC 340200268B	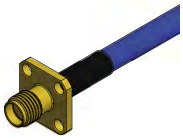	20 340200268B	16
SMA Connector, Male, Straight Plug (Axon' Type P567525)		N/A	17
SpaceFibre HDR, Female, Panel Mount Jack	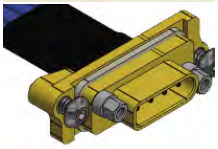	N/A	18

* N/A stands for Not Applicable: ESCC specification also describes SpaceFibre products which are not included into the Axon' 07072-ST-MDSA-HDR-01 specification.

© 2013, AXON' CABLE - RELEASED JUNE 2021/H

Harness codification

Those two identification codes present high data rate cable assembly codifications depending on the specification.
For ESCC3409/001, Axon' will attribute a unique manufacturer specific assembly identification.

ESA SPECIFICATION: ESCC 3409/001

IDENTIFICATION CODE 3409001 01 123ABC

DETAIL SPECIFICATION REFERENCE
3409001: High Data Rate cable assembly

COMPONENT TYPE VARIANT NUMBER
01: AxoWave® SC25SP

MANUFACTURER SPECIFIC ASSEMBLY ID.
123ABC: Specific cable assembly design (see §1.4.3*)

AXON' SPECIFICATION: 07072-ST-MDSA HDR-01

IDENTIFICATION CODE AXOMACH 05 D 300 05

SERIES
AXOMACH: High Data Rate cable assembly

CONNECTOR 1 VARIANT

04: Male 1-way	**07:** Female 1-way	**16:** Panel mount female 1-way
05: Male 2-way	**08:** Female 2-way	**17:** Panel mount female 2-way
06: Male 4-way	**09:** Female 4-way	**18:** Panel mount female 4-way

20: ESCC3402 all variant listed in §1.5.3** or Axon' SMA all variant listed in §1.5.4**.

WIRING
I: Indirect wiring (see §4.5.4**) **D:** Direct wiring

LENGTH OF CABLE (in mm)
> 100 mm for variants 04, 07 & 16
> 200 mm for variants 05, 08 & 17***
> 500 mm for variants 06, 09 & 18***

CONNECTOR 2 VARIANT

04: Male 1-way	**07:** Female 1-way	**16:** Panel mount female 1-way
05: Male 2-way	**08:** Female 2-way	**17:** Panel mount female 2-way
06: Male 4-way	**09:** Female 4-way	**18:** Panel mount female 4-way

20: ESCC3402 all variant listed in §1.5.3** or Axon' SMA all variant listed in §1.5.4**.
If connector 2 is not specified, the assembly is a pigtail.

*: refers to ESCC 3409/001
**: refers to 07072-ST-MDSA HDR-01
***: for shorter cables, please contact us.

© 2013, AXON' CABLE - RELEASED JUNE 2021/H

Codification examples

The table below gives codification examples.

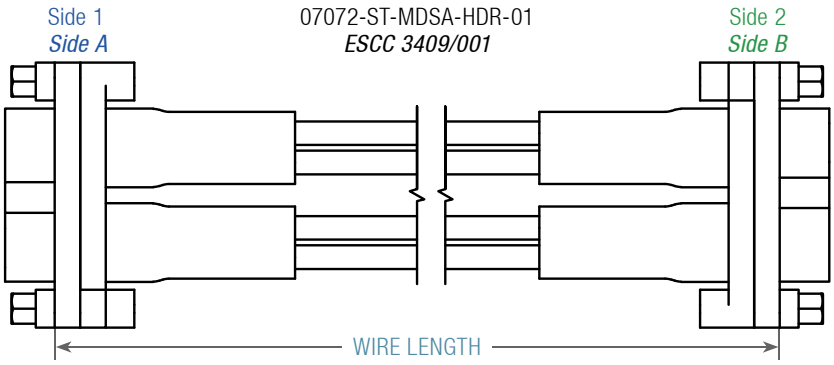

AxoMach® schematic diagram

Product	Description	Axon' Reference	07072-ST-MDSA HDR-01	ESCC 3409/001
The table below gives some codification examples				
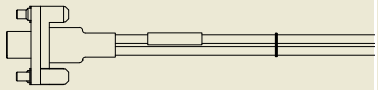	Harness assembly of 1000 mm composed of: Side 1/A: 1-way male connector Side 2/B: No connector	P558272x^L1000MM	**AXOMACH** **04 D 1000** *Variant 04* *Omit*	**3409001 01** **558272L1000MM** *Connector code 01* *Connector code 00*
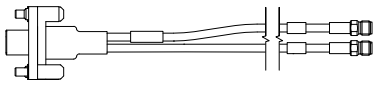	Harness assembly of 500 mm composed of: Side 1/A: 1-way male connector Side 2/B: SMA connectors 340200201	P558285x^L500MM	**AXOMACH 04** **D 500 20 340200201** Variant 04 Variant 20 340200201B	**3409001 01** **558285L500MM** *Connector code 01* *Connector code 14*
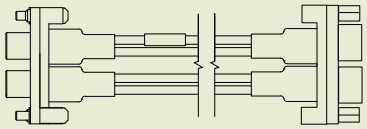	Harness assembly of 1500 mm composed of: Side 1/A: 2-way male connector Side 2/B: 2-way female connector	P556762x^L1500MM	**AXOMACH** **05 D 1500 08** Variant 05 Variant 08	**3409001 01** **556762L1500MM** *Connector code 02* *Connector code 05*
Custom design assemblies are included in ESCC 3409/001				
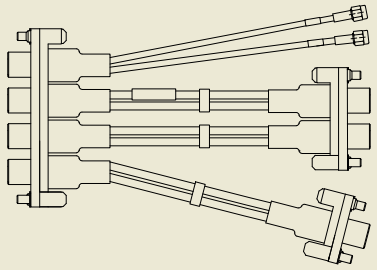	Harness assembly composed of: Side 1/A: 4-way male connector Side 2/B: - Two SMA Connectors 340200101B – L=1000mm - One 2-way male connector L=2000 mm - One 1-way male connector L=1500 mm	PYYYYYYx^	*Possible but not codified in the specification* Variant 06 Variant 20 340200101B Variant 05 Variant 04	**3409001 01 YYYYYY** *Connector code 03* *Connector code 12* *Connector code 02* *Connector code 01*

© 2013, AXON' CABLE - RELEASED JUNE 2021/H

AxoMach® panel mount & SMD connectors

To order the connector you need, you just need to give us the ESCC reference (see last column).

Product		Axon' Part Number	07072-ST-MDSA HDR-01	ESCC Spec 3401/089
AxoMach® HDR, 1 Way, Female, Panel Mount Receptacle *Also called parallel gap–1 way*	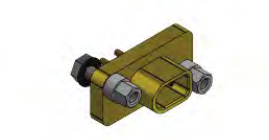	P545459	AxoMach **01**	340108**901**B
AxoMach® HDR, 2 Way, Female, Panel Mount Receptacle *Also called parallel gap–2 way*	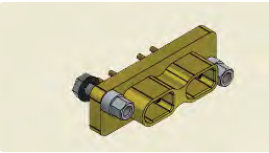	P545462	AxoMach **02**	340108**902**B
AxoMach® HDR, 4 Way, Female, Panel Mount Receptacle *Also called parallel gap–4 way*	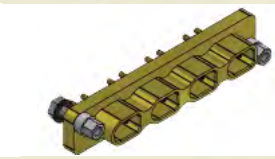	P545465	AxoMach **03**	340108**903**B
SpaceFibre HDR, Female, Panel Mount Receptacle with Pin PCB Terminations *Also called parallel gap SpaceFibre*		P555780	N/A	340108**904**B
AxoMach® HDR, 1 Way, Female, SMD Receptacle with Hand-formable Coaxial Cable PCB Terminations *Also called QFX 1 way*	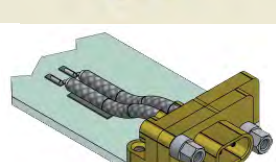	P545800	AxoMach **10**	340108**905**B
AxoMach® HDR, 2 Way, Female, SMD Receptacle with Hand-formable Coaxial Cable PCB Terminations *Also called QFX 2 way*	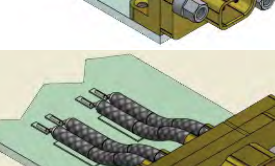	P545801	AxoMach **11**	340108**906**B
AxoMach® HDR, 4 Way, Female, SMD Receptacle with Hand-formable Coaxial Cable PCB Terminations *Also called QFX 4 way*	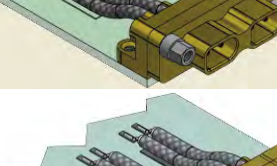	P545802	AxoMach **12**	340108**907**B
SpaceFibre HDR, Female, SMD Receptacle with Hand-formable Coaxial Cable PCB Terminations *Also called QFX SpaceFibre*	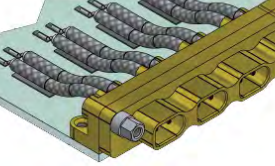	P552560	N/A	340108**908**B

Note: Variant number are in bold in the table above.
* N/A stands for Not Applicable: ESCC specification also describes SpaceFiber® products which are not included into the Axon' 07072-ST-MDSA-HDR-01 specification.

© 2013, AXON' CABLE - RELEASED JUNE 2021/H

AxoMach® accessories

To order the connector saver or blanking plate you need, please give us the ESCC Spec (see last column).

Product		Axon' Part Number	07072-ST-MDSA HDR-01	ESCC Spec 3401/090
Connector Saver, AxoMach® HDR 1 Way	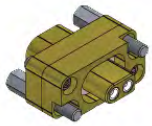	P549308	AxoMach **13**	3401090**01**B
Connector Saver, AxoMach® HDR 2 Way	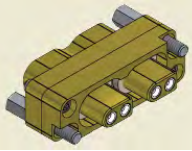	P549309	AxoMach **14**	3401090**02**B
Connector Saver, AxoMach® HDR 4 Way	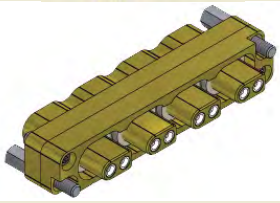	P549310	AxoMach **15**	3401090**03**B
Blanking plate, AxoMach® HDR, 1 Way *Also called Plug 1 way*	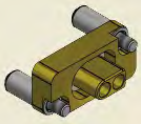	P566471	AxoMach **50**	3401090**04**B
Blanking plate, AxoMach® HDR, 2 Way *Also called Plug 2 way*	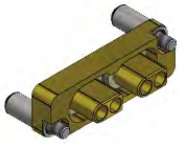	P566472	AxoMach **51**	3401090**05**B
Blanking plate, AxoMach® HDR, 4 Way *Also called Plug 4 way*	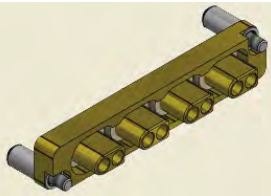	P566473	AxoMach **52**	3401090**06**B
Connector Saver, SpaceFibre HDR	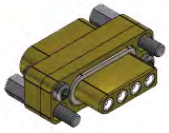	P571080	N/A	3401090**07**B

Note: Variant number are in bold in the table above.
* N/A stands for Not Applicable: ESCC specification also describes SpaceFiber® products which are not included into the Axon' 07072-ST-MDSA-HDR-01 specification.

© 2013, AXON' CABLE - RELEASED JUNE 2021/H

Weights

SpaceWire solutions

Cables	
Classic 28AWG SpaceWire	85 g/m maximum
Classic 26AWG SpaceWire	115 g/m maximum
Low Mass 28AWG SpaceWire	42 g/m maximum

Connectors	
9 way male connector (with screwlock and backshell)	about 8 g
9 way female connector (with screwlock and backshell)	about 8 g
9 way female CBR connector	about 3 g

MicroMach® Connectors	
Male in-line connectors	9.5 g
Female panel mount connectors	9 g
Female edge PCB SMT panel mount connector	4.5 g
Female wired PCB panel mount connector	5 g
Female flex PCB panel mount connector	5.5 g
Saver connector	7.5 g

Low Mass solutions

Cables	
Low Mass 28AWG SpaceWire	42 g/m maximum
Ultra Low Mass Coax cable (with overall shield)	37.5 g/m maximum
Ultra Low Mass Coax cable (without overall shield)	32.5 g/m maximum

Connectors	
Micro-D connector (with screwlock and backshell)	about 8 g
Nano-D connector (with screwlock and backshell)	about 2 g

© 2004, AXON' CABLE - RELEASED JUNE 2021/H

AXOMACH® links

Cables

AXON' REFERENCES	WEIGHT (g)
SC25SP (Microwave coaxial cable)	17 g/m (34 g/m per way)
SH22SW (QUASIFLEX hand-formable semi-rigid substitute)	17 g/m (34 g/m per way)

Connectors

ESCC REFERENCES	WEIGHT (g)
PCB / panel mount connectors	
3401/089 01	3 g
3401/089 02	5 g
3401/089 03	7 g
Panel mount connectors	
3409/001 connector code 07	8 g
3409/001 connector code 08	10 g
3409/001 connector code 09	15 g
Male cable mount connectors	
3409/001 connector code 01	6 g
3409/001 connector code 02	9 g
3409/001 connector code 03	15 g
Female cable mount connectors	
3409/001 connector code 04	6 g
3409/001 connector code 05	8 g
3409/001 connector code 06	12 g
PCB surface mount connectors	
3401/089 05	5.5 g
3401/089 06	8.4 g
3401/089 07	4.2 g
Connector savers	
3401/090 01	5 g
3401/090 02	7 g
3401/090 03	12 g
Blanking plates	
3401/090 04	3 g
3401/090 05	4 g
3401/090 06	5.5 g
SpaceFibre	
3401/089 04	4 g
3401/089 08	7.4 g
3401/090 07	4.9 g
3409/001 connector code 10	7 g
3409/001 connector code 11	8 g
3409/001 connector code 18	7.3 g

© 2013, AXON' CABLE - RELEASED JUNE 2021/H